SkyEdge II c

bigblu

CPE Installation and Pointing

User Guide

July 2018

Content

Chapter 1
Introduction

By following a few simple steps, you will assemble a satellite dish and point it to a satellite orbiting 22,000 miles above earth. Once the dish has been pointed successfully, the modem will log on to the system. During the log-on procedure, the system will automatically determine whether the dish has been pointed accurately.

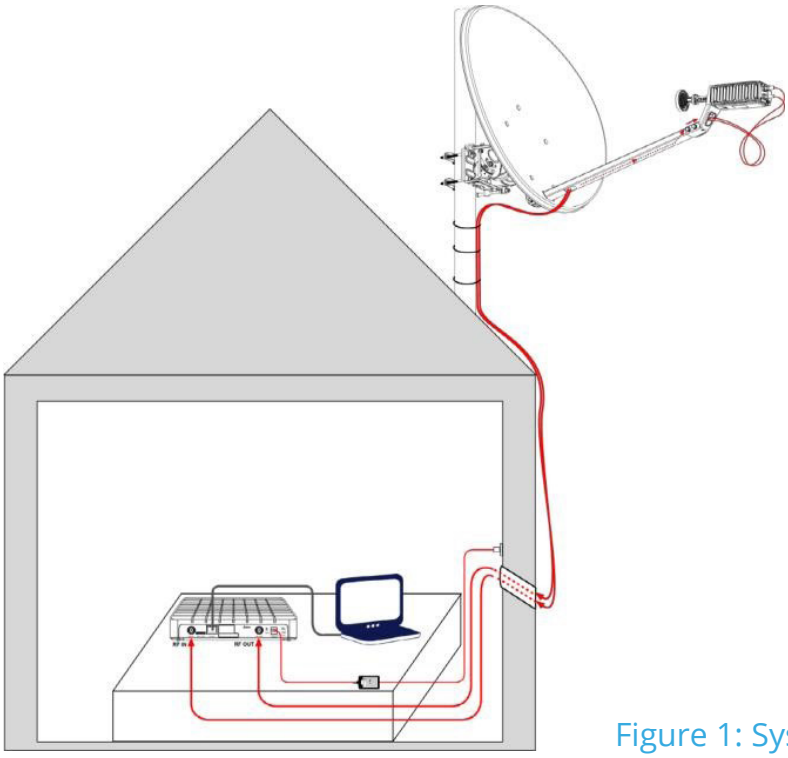

Figure 1: System Overview

Once pointing quality has been approved, Internet access will be available as per the service package ordered. The Internet connectivity provided over satellite is identical to terrestrial Internet: it enables you to surf the web, view online movies, chat with friends, etc. The Internet connection enables you to connect to web sites or other computers that are not necessarily connected to the Internet over satellite.

In This Chapter

Document Conventions

This symbol means “Danger!”
It is used to describe a situation that can cause bodily injury. Before working with any equipment, know the hazards involved and how to prevent accidents.

This symbol means “Be careful!”
In this situation, damage can be caused to equipment or data can be lost.

This symbol means “Take note!”
Notes contain helpful suggestions and explanations.

Terms of Direction

Throughout this document, you will encounter terms like “forward” and “backwards”, “up” and “down”.

The illustration below explains them.

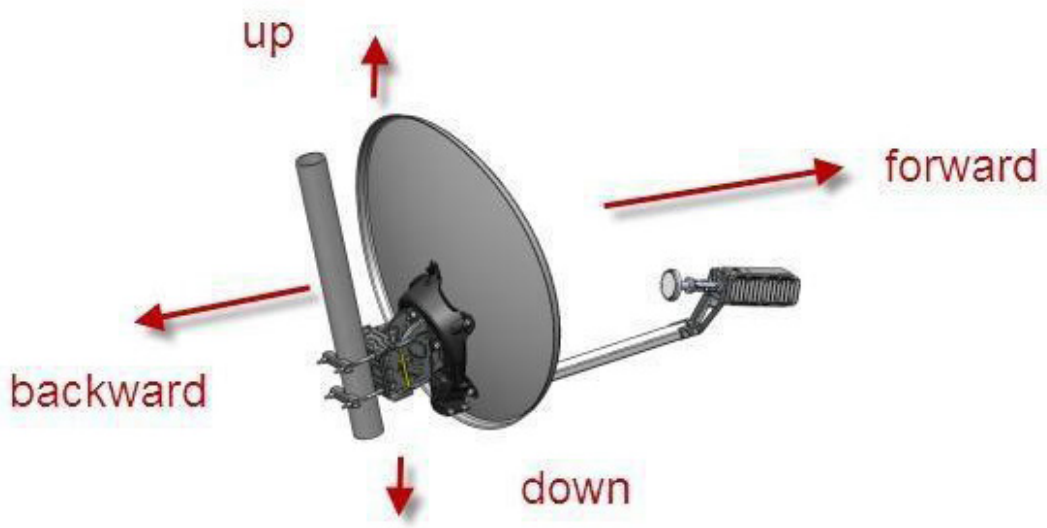

Figure 2: Directions

Safety

Warnings - Please read all operating instructions and safety precautions in this manual prior to any installation works.

Install the modem, dish, and wiring according to national and local regulations issued by authorities.

Mount the dish on a properly anchored pole or bracket, capable of bearing the dish weight and wind-load.

Use the anchoring material and method suitable to the structure and mechanical properties of the surface. Different types of walls and roofs may need different types of anchors for mounting the dish pole. Consult with a licensed constructor if in any doubt.

When working where there is a risk of falling from heights follow and maintain safety regulations for work at height:

- Use a proper elevating work platform, scaffold, or ladder of proper design and weight rate. Install and use fall-arrest system.
- Wear protective clothing such as footwear that minimizes the risk of slipping, wear safety helmet well secured to head so that it remains in place should the person fall.

Postpone installation to avoid work in bad weather conditions, when rain may make surfaces slippery, when windblasts might impose unexpected forces on dish, when there is a risk of thunderstorm, or when it is too dark.

During installation, tightly secure all parts to avoid potential danger to persons and surroundings.

Restrict access to area near or below working place.

For safety reasons, work and install the dish at a safe distance from power lines.

To conform to the law, the installer must follow IEC 60728-11 – Cable networks for television signals, sound signals, and interactive services – Part 11: Safety.

Consult with a licensed electrician if in doubt.

With reference to standard IEC 60728-11, according to risk assessment per site conditions - select proper method and install proper means of protection, such as air terminal, down-conductor, grounding system, equipotential bonding conductors, Surge Protection Devices on alternating current power and on Ethernet lines.

Before installing the modem, make sure that your electrical outlet is properly wired and your computer equipment is properly grounded.

RF Radiation Hazard: The transmitting equipment on dish is capable of generating RF electromagnetic field. Keep the space between feed horn and reflector (the radiation beam) clear: do not enter the radiation beam of the dish reflector when the modem is powered and connected to the transmitter.

Note that during the pointing procedure the transmitter is powered down, therefore there is no reason for concern during installation.

Different types of power cords may be used for connections to the electrical outlet. Use only a main line cord that complies with safety requirements of the country of use.

Do not use power cord if damaged.

Connect the power cord to a properly grounded three-prong alternating current outlet only. Do not use adapter plugs. Do not remove the grounding prong from the plug.

To prevent electrical shock, fully insert the power plug into power outlet with no part of the prongs exposed.

To prevent fire or shock hazard, do not expose the modem to rain or moisture. Do not expose to dripping or splashing and do not place liquid filled objects on the modem.

Cautions

To prevent overheating, do not block the ventilation holes on the top surface of the modem. Do not stack the modem on top of or below other electronic devices. Do not place the modem in location subjected to direct sun light. Do not place the modem near heat sources. When the modem is placed in an enclosure or cabinet - provide proper ventilation.

Only use the power supply provided with the modem. Using a different power supply might damage the equipment.

Do not connect or disconnect coaxial cables when the modem is powered. DC voltages are present on the coaxial connectors.

To avoid damage by static electricity, disconnect or re-connect the Ethernet cable from the modem or from computer only when the modem is connected to power adapter and to alternating current outlet. When connected to wall alternating current outlet via power supply, the modem is well discharged from static electricity.

To minimize faults of cables disconnection, mount the modem in permanent location and final position, not expected to be moved or re-positioned in the future. Coaxial cables might disconnect from connectors if subjected to mechanical movements.

To avoid equipment damage, only wipe the unit with a clean, dry cloth, never use fluids, chemicals, or spray cleaners directly.

The system has no user-serviceable parts. Do not attempt to open and service the product by yourself: this will void the product's warranty. Do not perform any actions other than those contained in the installation and troubleshooting instructions. Refer all servicing to qualified service professionals.

Notices

To ensure regulatory and safety compliance, use and properly install the provided power and coaxial cables – or equivalent only - which conform to the specifications within this manual.
In some countries, authorization is needed for installing satellite dish. Consult with your local authorities if in any doubt.

Chapter 3

Box Contents

> It is important to open the box in a suitable location to ensure the modem is not exposed to excessive humidity and/ or extreme temperatures.

To inspect the contents of the box:

1. Open the box.

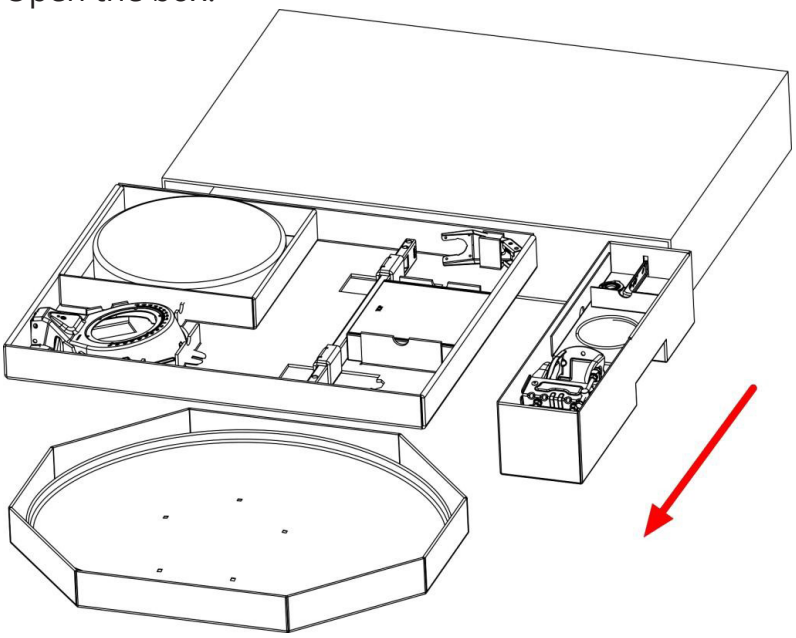

Figure 3: Opening the Box

2. Compare the contents of the box with the packing list.

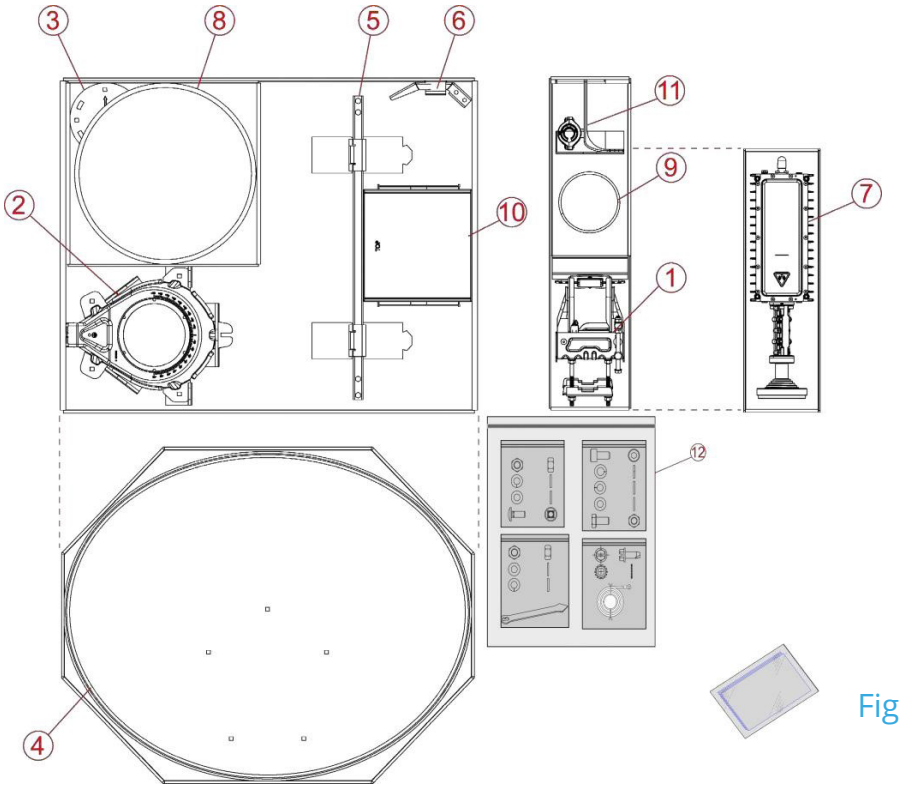

Figure 4: Box Contents

The Box Must Contain The Following Kit Components:

1. Az/El with clamps
2. Back bracket
3. Skew plate
4. Reflector
5. Boom arm
6. Transceiver bracket
7. Transceiver
8. RF cables and F-connectors
9. Grounding cable bag
10. Modem box
11. TV Receiver Bracket/Holder Kit (optional)
12. Hardware Bag
13. Documentation Bag

3. Compare the contents of the box with the Packing List (on page 11).

If something is missing/damaged/wrong, contact your supplier.

4. Set aside the modem box for later use.

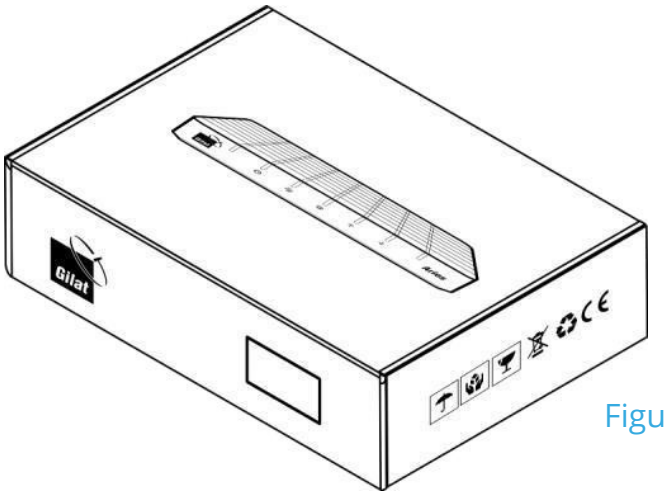

Figure 5: Modem Box

5. Put the rest of the components back into the kit box to make it easy to transport to the dish installation location.

Packing List

Dish Assembly Box

#	Item	Quantity	Image
1	1 RF Cable (SIAM) 30M	1	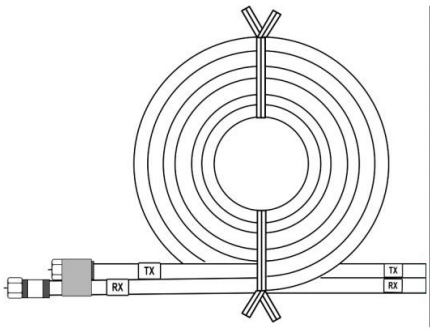
2	Reflector	1	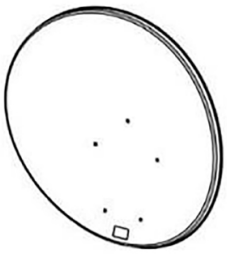
3	Boom Arm	1	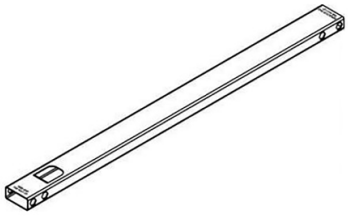
4	Transceiver Bracket	1	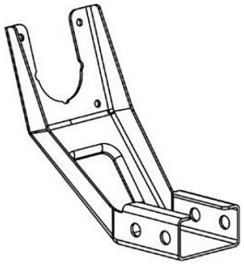
5	Back Bracket	1	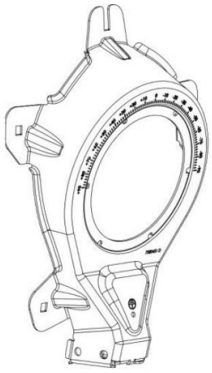

#	Item	Quantity	Image
6	Az/El (assembled - with pole clamps)	1	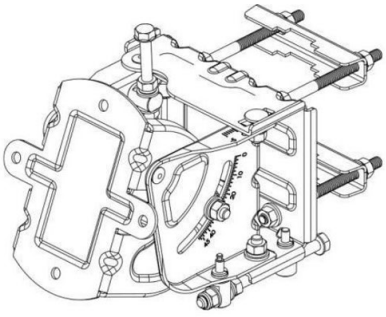
7	Skew Plate	1	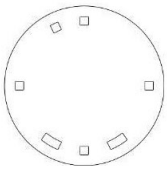
8	Hardware Bag	1 set - see below	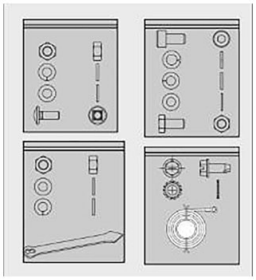
9	Documentation Bag	1 set - see below	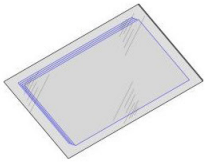
10	Modem Packing Box	1 set - see below	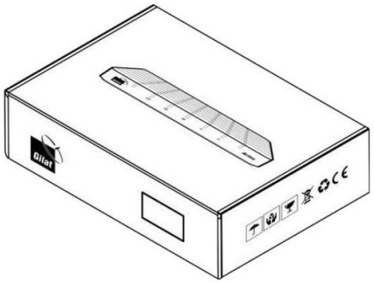
11	Transceiver Packaging Box	1 set - see below	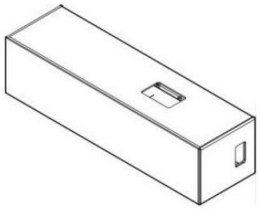

Modem Packaging Box

The box includes the following items

#	Item	Quantity
1	SkyEdge II-c Aries Modem	1
2	Power Adapter	1
3	Power Cable	1
4	LAN Cable	1
5	F-Connector	2

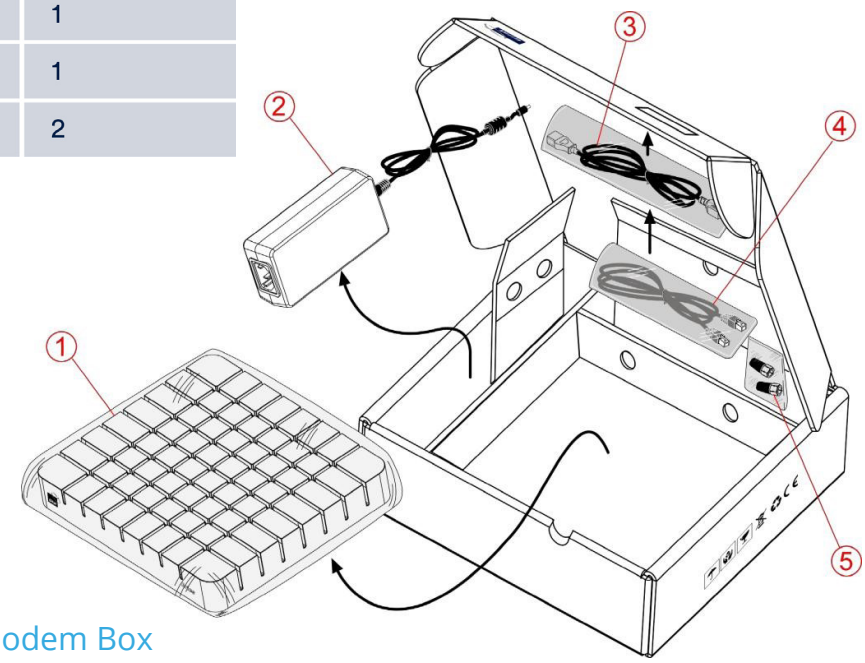

Figure 6: Modem Box

Transceiver Packaging Box

The box includes the following items

#	Item	Quantity
1	Transceiver with Feed and Polarizer	1
2	Grounding Screw	1
3	Allen Key	1

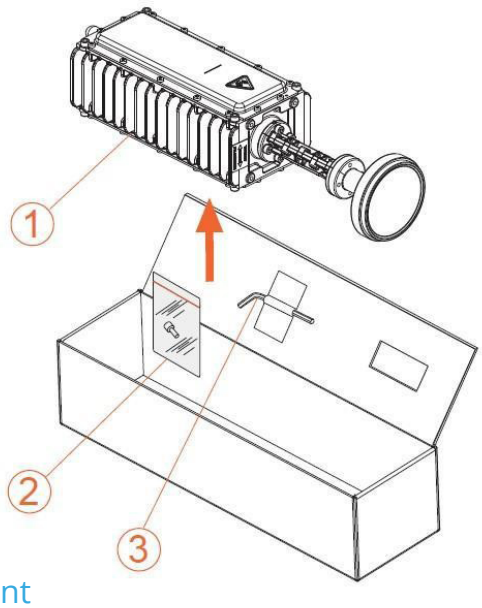

Figure 7: Transceiver Box Content

Hardware Bag

The bag includes the following items

Dish Assembly Kit

#	Item	Quantity	Description
1	Bolt M8X20	9	Carriage bolt - short neck, M8x1.25mm thread
2	Spring Washer	9	for 8mm bolt
3	Flat Washer	9	for 8mm bolt
4	Nut	9	Hex M8X1.25

Mounting Kit

#	Item	Quantity	Description
1	Arrow	1	Elevation Offset Arrow

Transceiver / Boom Arm Assembly Kit

#	Item	Quantity	Description
1	Screw	4	Hex Socket Head Cap Screw
2	Washer	4	Spring Washer M4
3	Screw	8	Hex Head Screw M8
4	Washer	8	Flat washer M8
5	Washer	8	Spring washer M8

Grounding Kit

#	Item	Quantity	Description
1	Screw	1	Hex head tapping screw, 1/4-20 x 5/8
2	Washer	1	Ext tooth lock washer 1/4"
3	Wire	1	Grounding Wire

Documentation Bag

The bag includes the following items

#	Item	Quantity
1	Quick Guide	1

What's Not in the Box

What you need to provide:

A levelled Pole

Tools for the installation

Pointing Data

> If you are planning to use the dish for satellite TV reception, you will also need a TV bracket

Tools

Tools required for the installation of the satellite dish:

A spanner (wrench): open and closed hexagonal metric 13 mm (preferably ratchet type)

A flat-blade screwdriver

(Optional) A Phillips type screwdriver

A compass

A cable cutter

A ruler (10-30 cm)

Cable wraps / ties

Pointing Data

> The invoice contains important data necessary for successful installation. Do not start the installation unless you have the invoice with all the data (see below).

Pointing data (appears in the invoice):

- Satellite name
- Elevation value
- Azimuth value
- Skew value
- Location code
- RF Cluster code
- Configuration File

Chapter 4

Installing the Equipment

In This Section

Selecting the Dish Location

Installing a Levelled Pole

Installing the Dish

Selecting the Dish Location

Determine the suitable location for your satellite dish

Selecting a suitable outdoor location with a clear view towards the satellite is very important: obstructions (e.g., buildings or trees) may affect the signal strength. The cable is 30m long. The distance between the satellite dish and the modem location should not exceed this distance.

Figure 8: Unsuitable Location 1

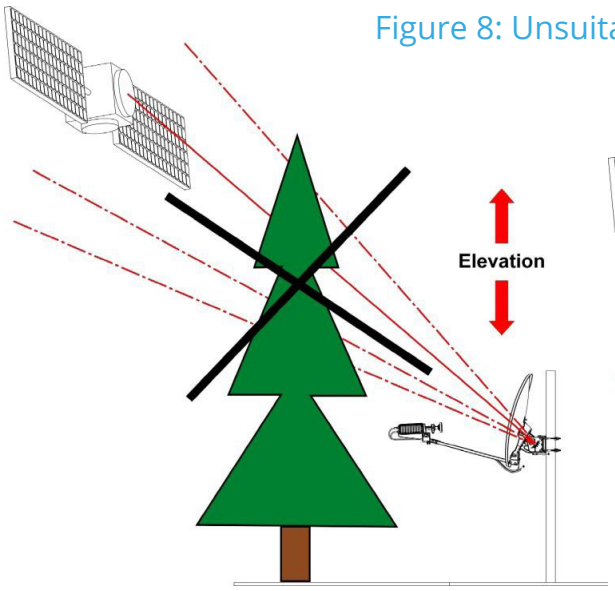

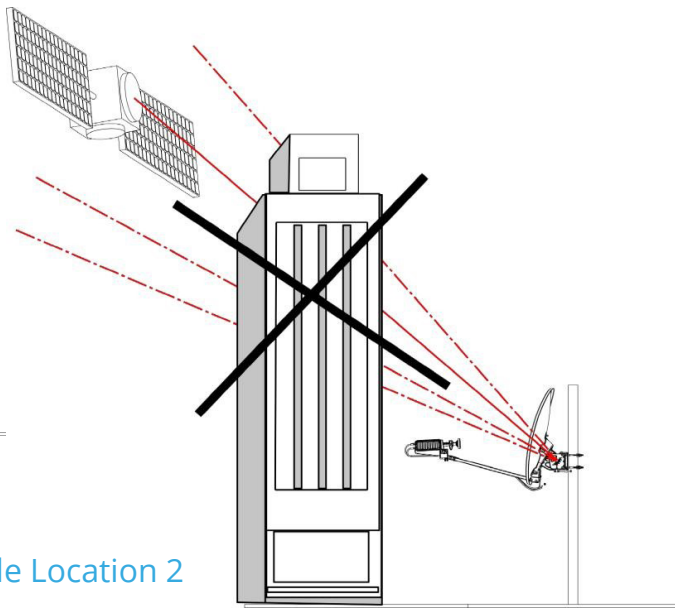

Figure 9: Unsuitable Location 2

For information on how to select dish location using a smartphone application, refer to Dish Pointing Smartphone Applications (on page 47).

Installing a Levelled Pole

When installing a pole for the dish, follow these guidelines:

The pole diameter must be between 45 and 70 mm.
The pole must be installed on a solid base.

Mechanical forces to be considered:

The wind load of the dish is 495 N at pressure of 800 N/m2 according to EN 60728-11.
The maximum bending moment of the mounting mast (1000mm high) at the fixing point is 495 NM.
The rotational stiffness of dish mount shall be better than 0.02° at operational wind speed of 70 km/h.

Installing the Dish

Bring the kit box with its contents to the place where you have installed the pole and spread out the components of the dish and transceiver for assembly and outdoor installation.

Tip: Leave the box containing the modem indoors.
The box is shown in the Figure to the right.

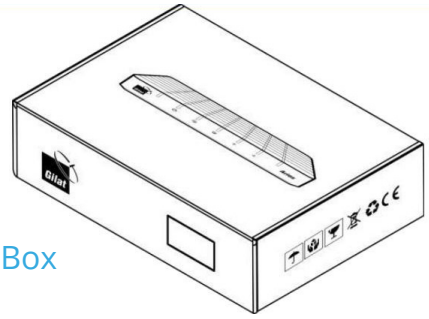

Figure 10: Modem Box

Assembling the Back Bracket with the Az/El

To assemble the back bracket on the Az/El:

1. Place the Az/El, clamps down, on an even surface so that its elevation bracket surface faces upwards.
2. Position the back bracket with its rear surface to the Az/El.
3. Apply the skew plate to the back bracket with the arrow marking facing forward.
4. Insert the four bolts through the holes in the skew plate and the Az/El.
5. From the rear side, place a flat washer, a spring washer, and thread a nut on each bolt.
6. Tighten the nuts **by hand** leaving enough freedom to allow rotation of the back bracket.

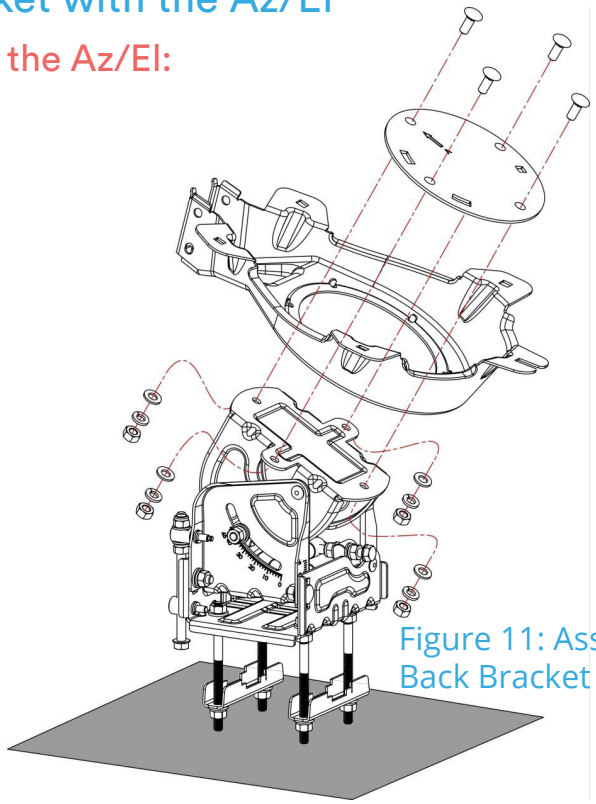

Figure 11: Assembling the Back Bracket with the Az/El

Mounting the Az/El on the Pole

To mount the Az/El+back bracket on the pole:

1. Loosen the clamp nuts.

2. Release the clamps from the bolts on the open side.

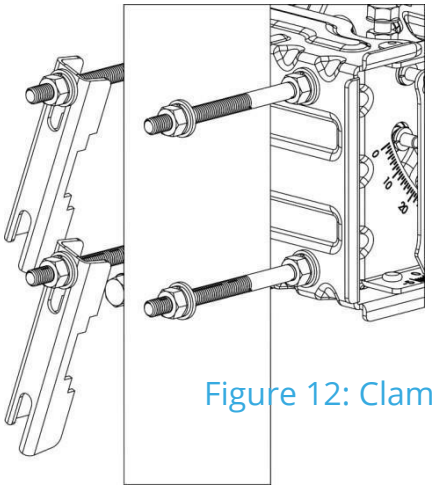

Figure 12: Clamps Released

3. Place the Az/El on the pole.

4. Reposition the clamps on the bolts.

> To ensure a sturdy mount, make sure that the clamp has been shifted in the direction of its open end as far as possible.

5. Tighten the nuts **by hand**.

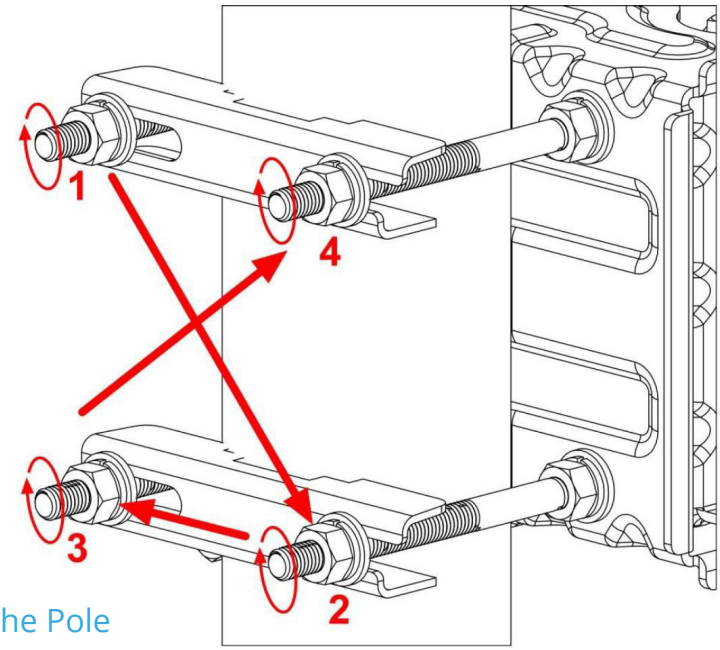

Figure 13 : Mounting the Az/El on the Pole

> Tips:
> It is **important** to partially tighten the nuts to prevent the assembly from sliding down the pole under its own weight but leave some leeway to allow the rotation of the assembly around the pole with just a moderate effort during the pointing procedure.
>
> It is **desirable** to tighten each nut 1/2 turn at a time, moving from nut to nut in a crisscross manner (1-2-3-4) as shown in the Figure above, slowly increasing the tension.

Setting Nominal Elevation

To set the nominal elevation:

1. Verify that the two nuts retaining the Az/El vertically movable part (marked with a larger circle) are loose.

Keep in mind there are two nuts, one at each side.

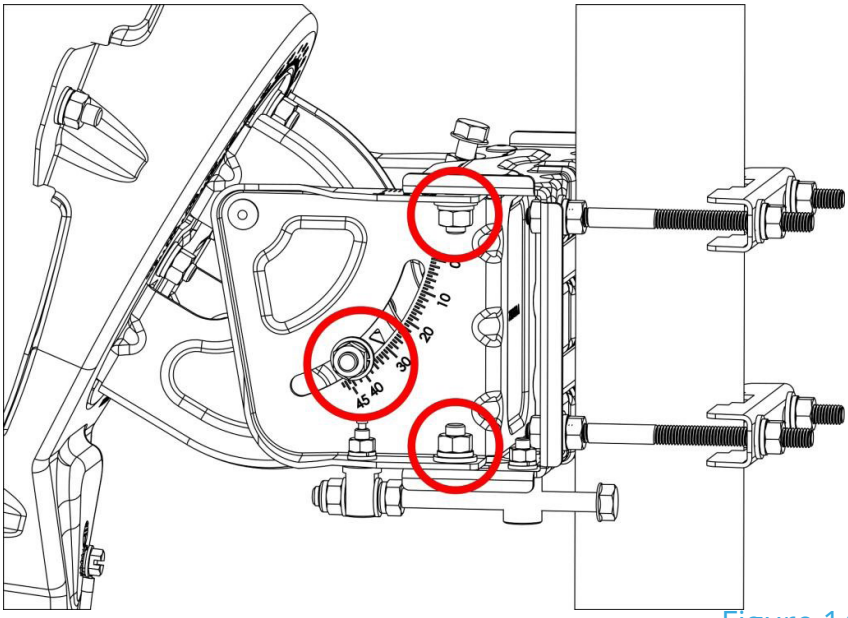

Figure 14: Retention Nuts

2. Verify that the two nuts retaining the Az/El horizontally movable part (marked with smaller circles) are loose.

3. Rotate the elevation screw to set the nominal elevation value as indicated in the invoice.

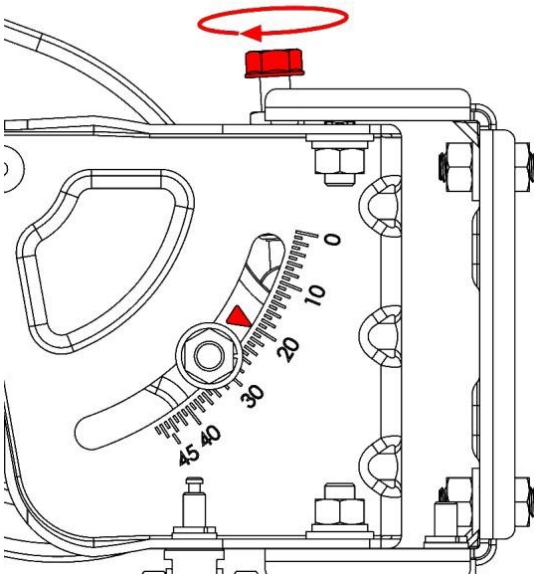

Figure 15: Elevation Screw

The Az/El unit is supplied pre-set to 20 degrees elevation (see Figure above). The bars of the elevation scale have a 2-degree resolution; smaller markings in between provide a 1-degree grid.

Mounting the Reflector

To mount the reflector:

1. Verify that the back bracket rotates freely relative to the skew plate.

> If the rotation is not free enough, you need to slightly release the nuts of the four bolts holding the skew plate.

2. Rotate the back bracket around the skew plate until the U-slot faces upward.

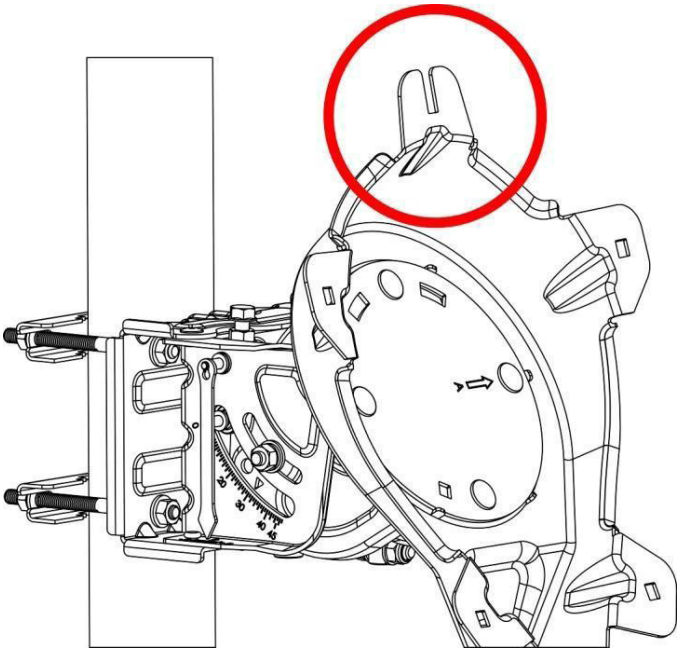

Figure 16: Back Bracket - U-slot

3. Insert a bolt into the uppermost hole of the reflector from the concave side. CPE

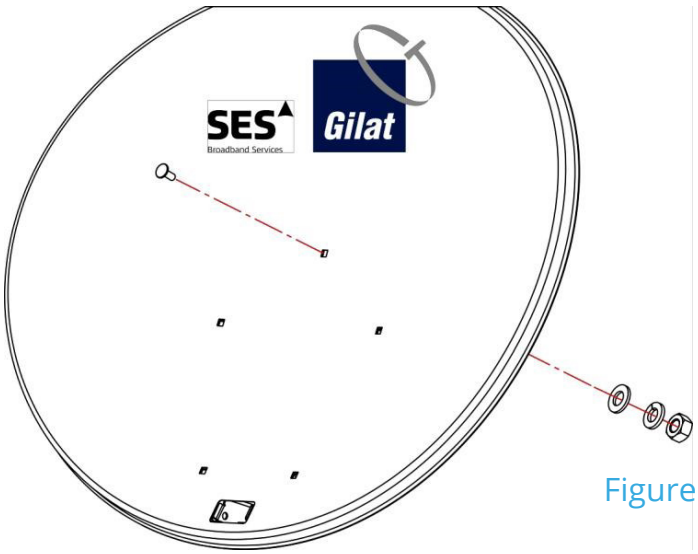

Figure 17: Reflector - Uppermost Hole

4. Put a flat washer and a spring washer on the bolt.

5. Thread a nut 2-3 threads onto the bolt.

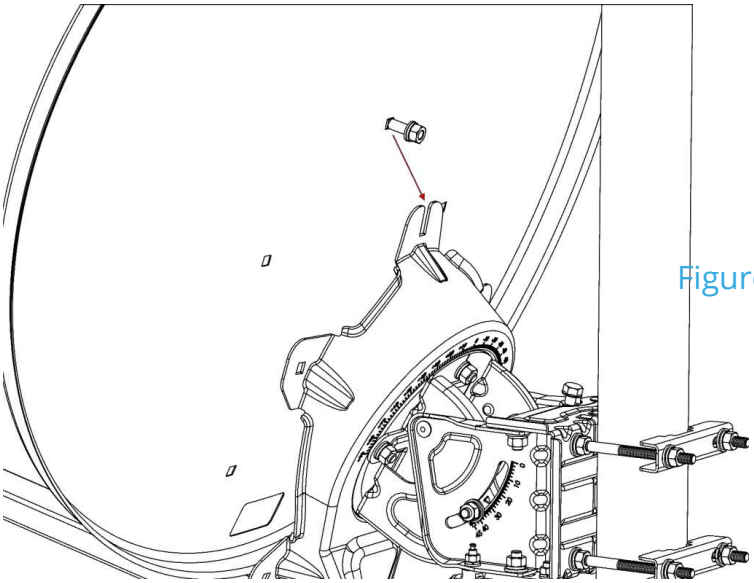

Figure 18: Dish above U-Slot

6. Bring the reflector in contact with the back bracket and slide it down so that the bolt would enter the U-slot of the back bracket to establish the initial positioning.

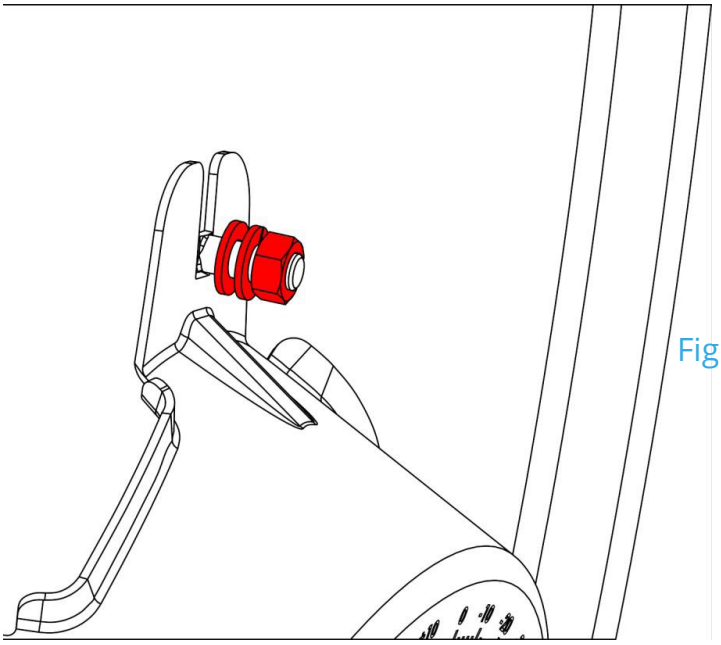

Figure 19: Nut Threaded Halfway on Bolt

7. Insert the remaining four bolts to attach the reflector to the back bracket.

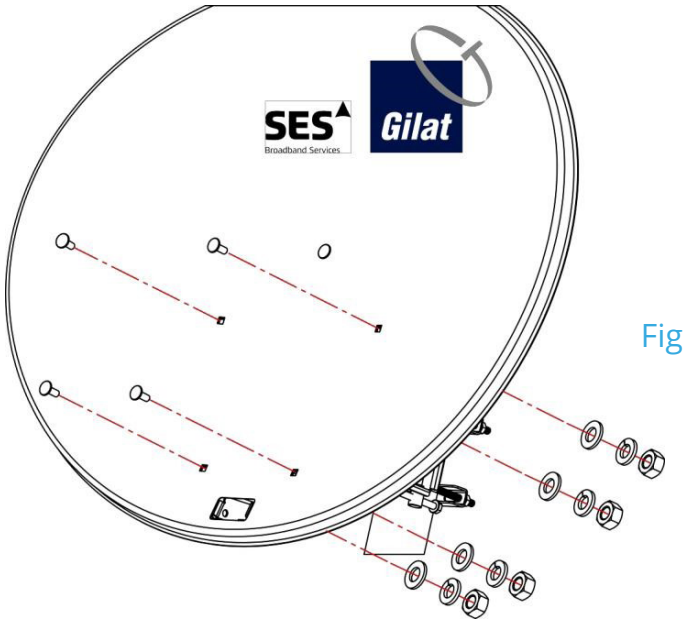

Figure 20: Reflector with Screws Inserted

8. On each bolt, place a flat washer, then a spring washer, then a nut.

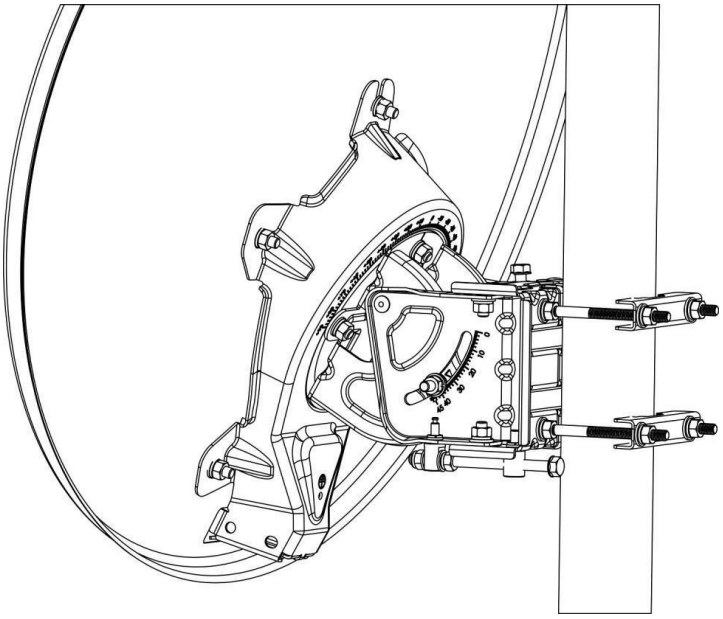

Figure 21: Reflector Attached to Back Bracket

9. Tighten all the nuts by hand first; complete the tightening of all the nuts with a spanner/ratchet.

Attaching Boom Arm to Back Bracket

To attach the boom arm to the back bracket:

1. Insert the reflector end of the boom arm into the back bracket all the way, until it locks into position.

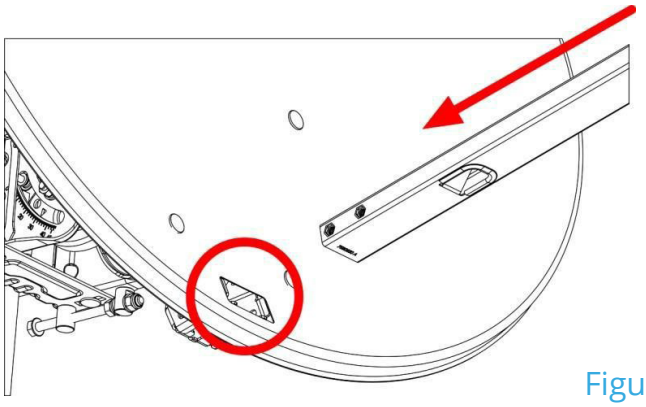

Figure 22: Inserting Boom Arm into Back Bracket

2. Insert and tighten by hand the four bolts (with flat and spring washers) - two at each side.

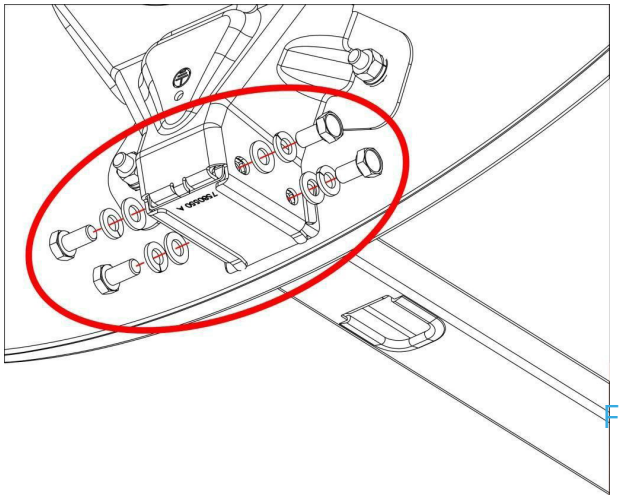

Figure 23: Attaching Boom Arm - 1

Assembling Transceiver Bracket and Transceiver

To assemble the transceiver bracket and the transceiver:

1. Put the transceiver bracket on the feed end of the boom arm.

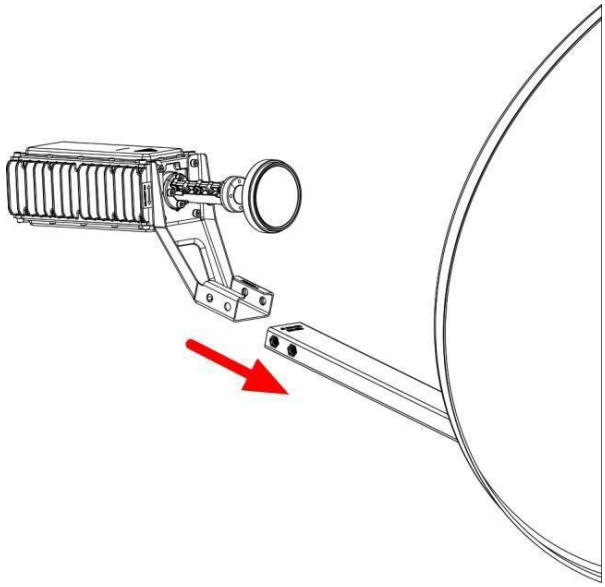

Figure 25: Assembling Transceiver Bracket on Boom Arm

2. Insert and tighten the four bolts (with flat and spring washers) - two at each side.

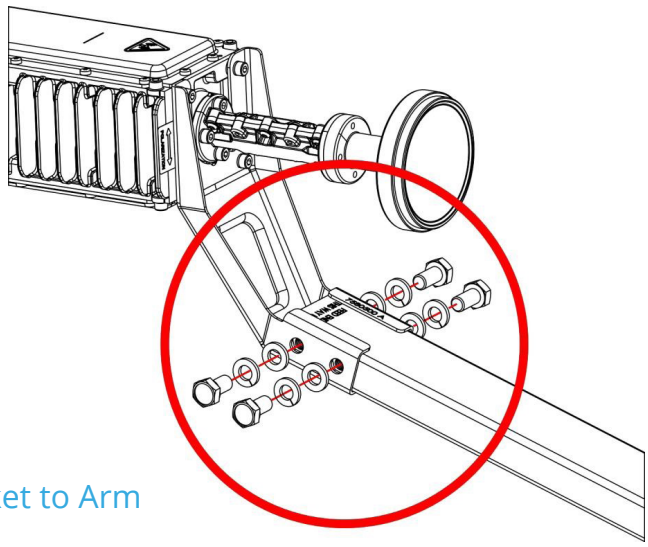

Figure 26: Attaching Bracket to Arm

3. Tighten the four bolts.

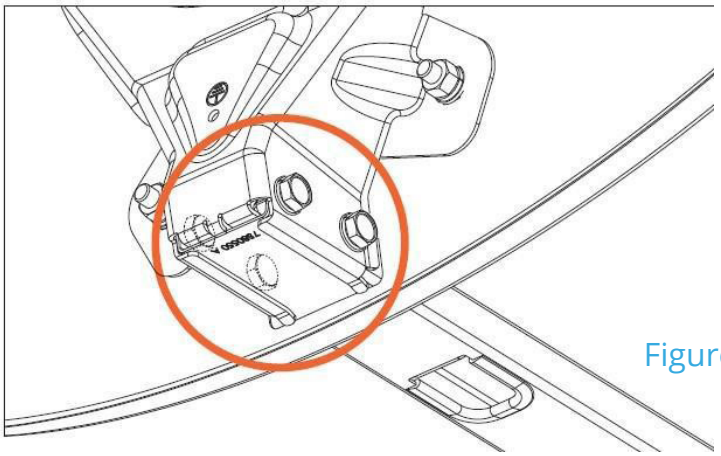

Figure 27: Attaching Boom Arm - 2

Threading the RF Cables Through the Boom

> Each coaxial cable is equipped with a connector on the outdoor end. The indoor end of the cable has no connectors attached.

To thread the RF cables through the boom:

1. Feed the outdoor ends of the cables (with the pre-attached F-connectors) through the boom in the direction of the transceiver.

> If threading through the boom is problematic or impossible due to complicated installation conditions, just attach the cables to the boom (preferably under the boom) with 2-3 cable ties/straps.

2. Leave 1m of extra cable between the boom arm and the transceiver.

Connecting Cables to Transceiver

To connect the cables to the transceiver:

1. Screw the male F-connectors of the RF cables onto the corresponding female RF-connectors of the transceiver (Rx to Rx, and Tx to Tx) leaving a loop of extra-length cable as shown in the Figure below.

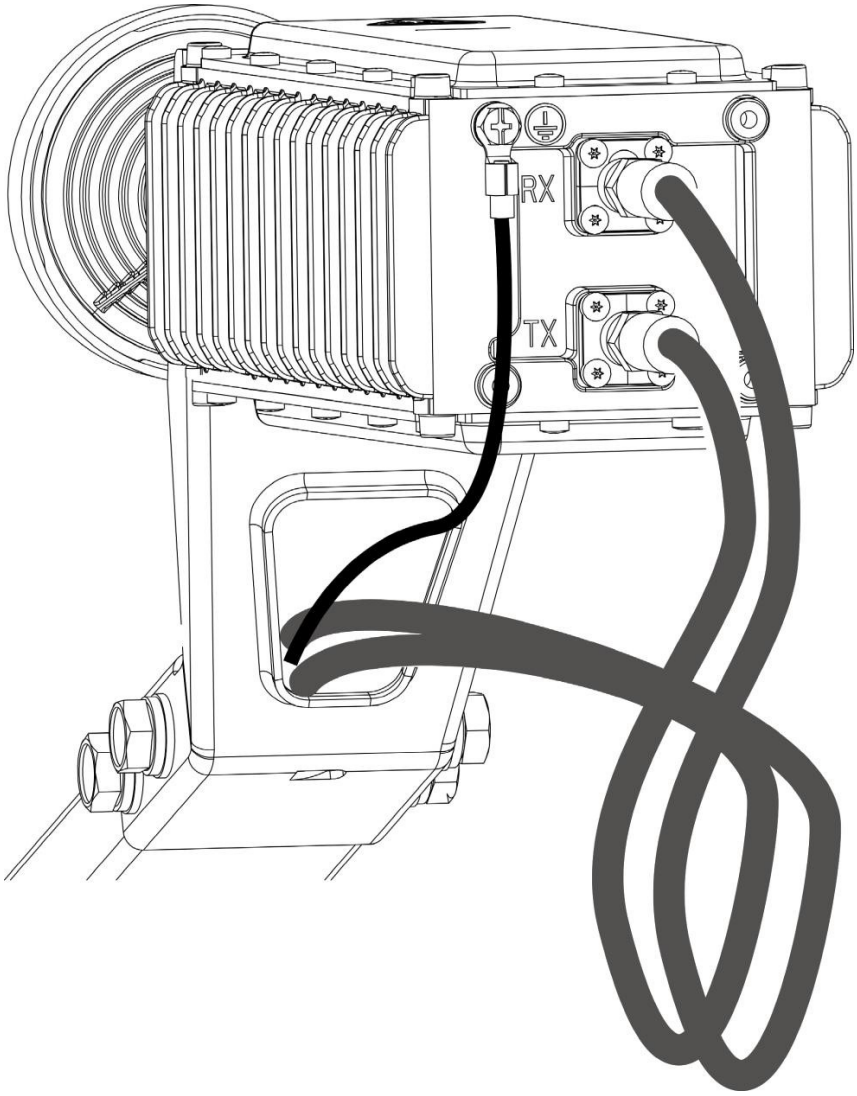

Figure 28: Grounding the Transceiver

Grounding the Transceiver

To ground the transceiver:

1. Connect one end of the equipotential bonding cable to the transceiver using the screw provided.

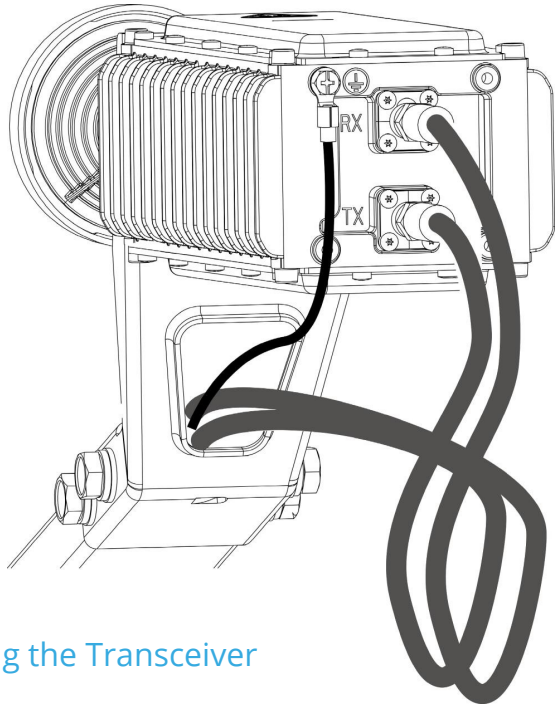

Figure 29: Grounding the Transceiver

2. Connect the other end of the equipotential bonding cable to the rear bracket using the screw provided.

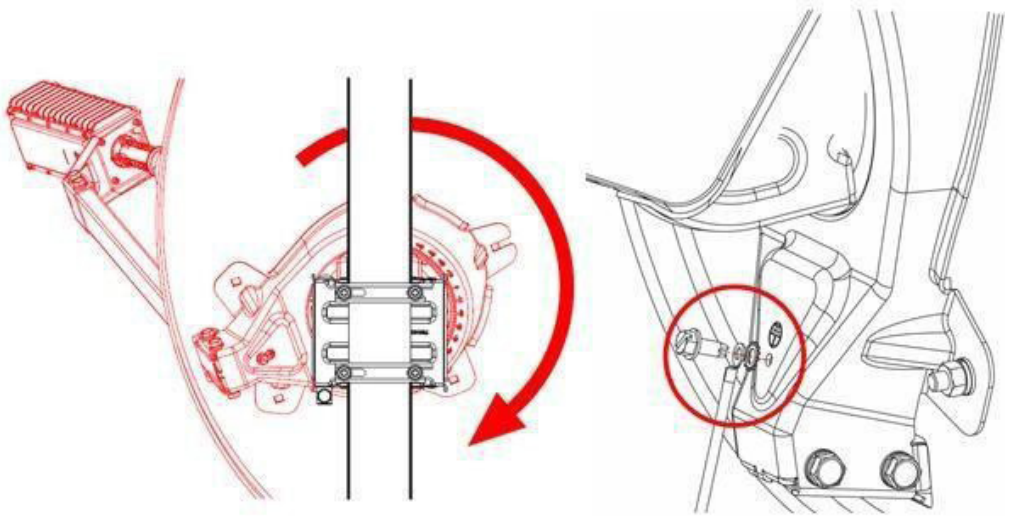

Figure 30: Grounding the Back Bracket

3. Ground the pole supporting the dish according to local regulations.

> Grounding can be done by attaching a down-conductor to the grounding screw of the back bracket (as shown in the image above) with a 6.5mm ring-terminal (not provided with this kit).

Setting Nominal Skew

To set the skew value:

1. Rotate the back bracket-reflector assembly around the Az/EL-skew plate assembly to set the skew value as indicated in the invoice.

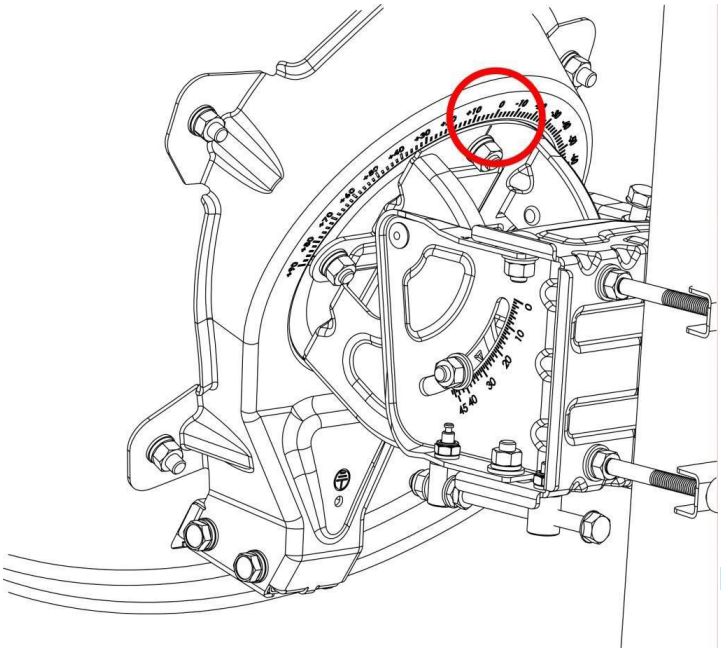

Figure 31: Skew Scale

2. Tighten the four nuts holding the Az/EL-skew plate assembly together.

Setting Nominal Azimuth

At this stage, the bolts of the clamps should be partially tightened so that the Az/El is flush against the pole yet loose enough to allow it to rotate smoothly around the pole.

To set the nominal azimuth:

1. Verify that the fine-tuning grid (see the Figure to the right) is set to zero. If not, adjust using the azimuth screw.

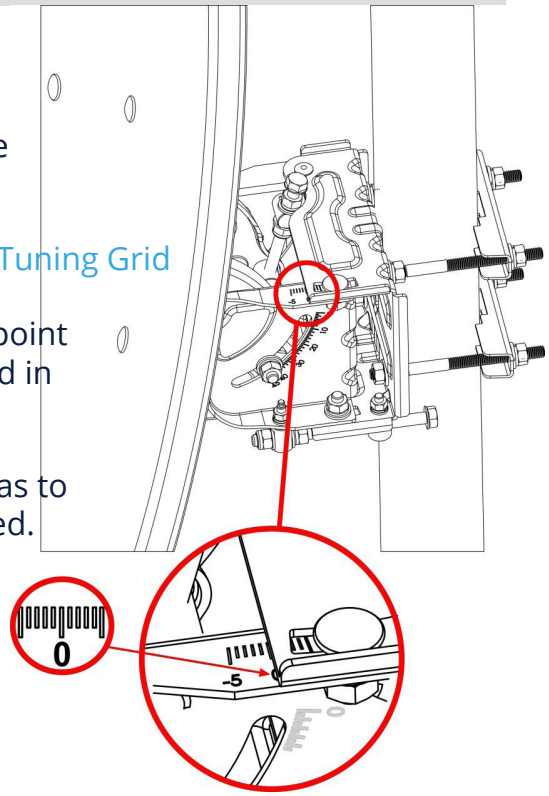

Figure 32: Azimuth Fine-Tuning Grid

2. Using a compass, determine the direction to point the dish according to the azimuth value provided in the invoice.

3. Rotate the dish assembly around the pole so as to point its front surface in the direction determined.

4. Attach the elevation offset arrow.

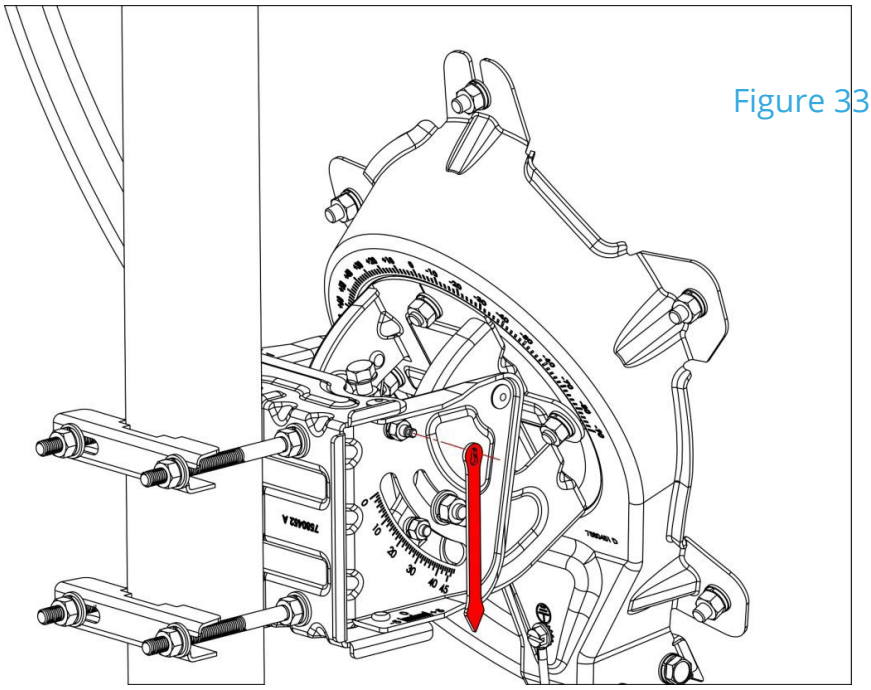

Figure 33: Elevation Offset Arrow

If the pole is not ideally vertical, you will notice the offset on the offset scale (see the Figure below).

Keep in mind that the bars of the elevation scale have a 2-degree resolution; smaller markings in between provide a 1-degree grid. The offset scale has 1-degree markings.

5. Check the elevation offset value.

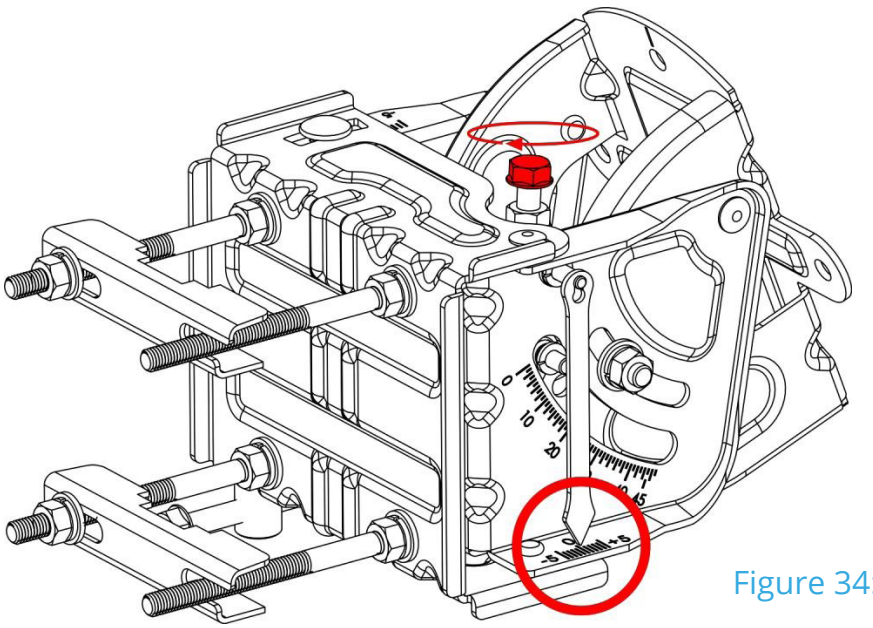

Figure 34: Elevation Offset Scale

6. If a non-zero offset value is determined, adjust the position of the dish accordingly:

for positive offset, increase the elevation (e.g., the invoice indicates 33 degrees elevation, and the elevation offset scale shows +1 degree; to compensate for the pole deviation, set the elevation to 34 degrees).

for negative offset, decrease the elevation.

Threading the Cables into the House

You may need to drill holes in order to thread the cables into the house. As wall materials vary, you may need to contact your local specialist for advice on particulars.

Make sure to drill these holes at an angle that prevents the water from seeping into the house: when drilling from the outside, the drill must be pointed slightly upwards.

Assembling the Indoor Connectors

To make threading the cables through narrow openings an easier task, the indoor ends of the cables have no connectors attached. This also allows you to adjust the length of the cable removing the extra length.

You will need a cutter (and probably pliers as well) to connect the F-connectors.

To attach the F-connectors to the indoor ends of the cables:

1. (Optional) Roll the excess cable into a coil or shorten the cables to the desired length if they are too long for your room layout.

Shortening the cables must be performed carefully: they are supplied with Tx and Rx stickers; cutting off the excess length of both cables together will make it impossible to determine which cable is which.

You need to cut one cable first, and mark it (Rx or Tx, depending on which cable you are cutting off) with a permanent marker or a sticker to ensure that after cutting off the other cable, you will be able to determine which cable is which.

Note that one of the cables has a running mark printed lengthwise - it also allows you to differ between the Rx and Tx cables.

2. Strip about 18 mm of the outer jacket only.

3. Fold the wire shielding backwards over the cable jacket (but do not remove the aluminium foil).

4. Strip 8 mm to the inner conductor.

5. Insert the stripped end of the cable into the F-connector as deep as you can.

6. Screw the F-connector on the wire by hand, applying sufficient force, until the internal insulation is aligned with the rim of the connector.

Verify that throughout, the procedure the cable is centred and straightened in the connector. Otherwise, you will not be able to screw the connector to the end-position on the cable.

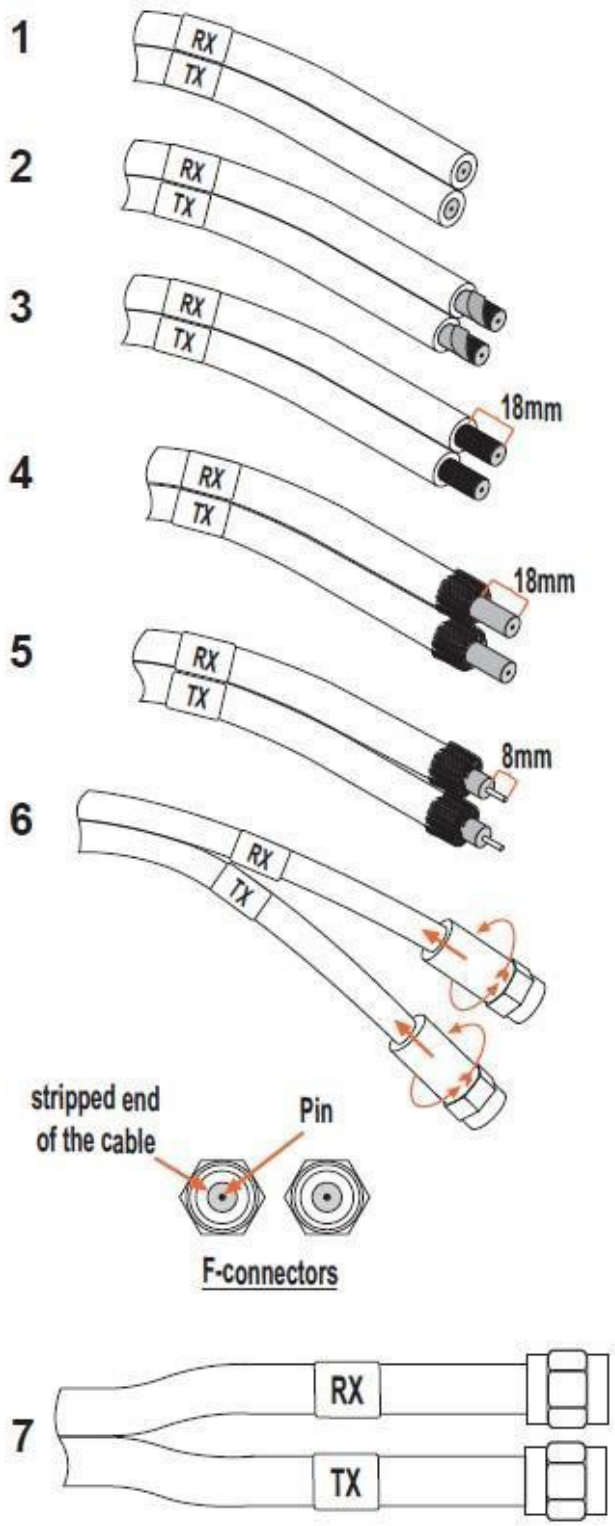

Figure 35: Connector Assembled on Cable

7. Repeat this procedure assembling the other cable and F-connector

Chapter 5

Modem Configuration

In This Section

Choosing Installation Time

Service is available 24/7; therefore, installation can be performed anytime.

For safety reasons, it is advisable to install the dish during the day.

Initial pointing must be performed under clear sky condition to guarantee accurate pointing: pointing in rainy, cloudy, or windy weather can interfere with the stability of indicators.

Installing and Connecting the Modem

To start modem installation:

Unpack the modem as shown in the Figure below.

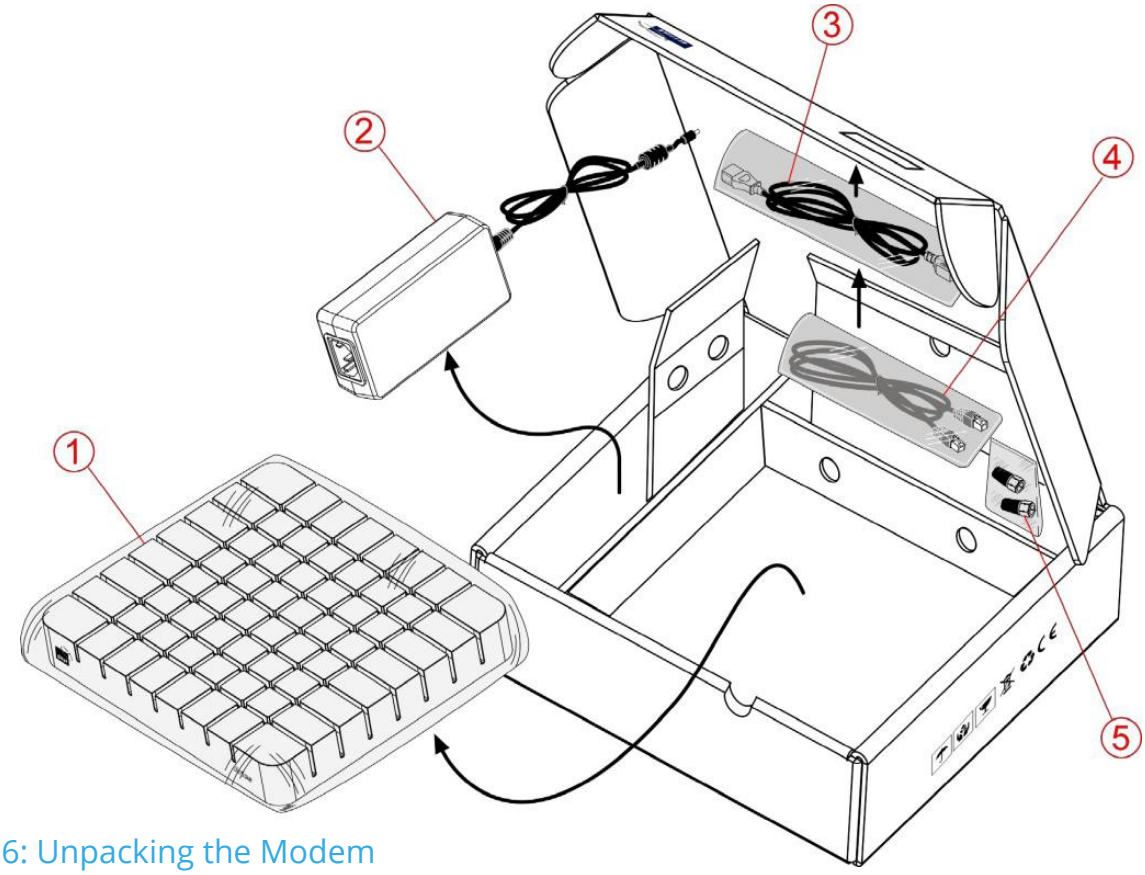

Figure 36: Unpacking the Modem

Connecting RF Cables to Modem

To connect the RF cables to the modem:

1. Screw the male cable F-connector marked Rx on the RF IN female connector on the modem.

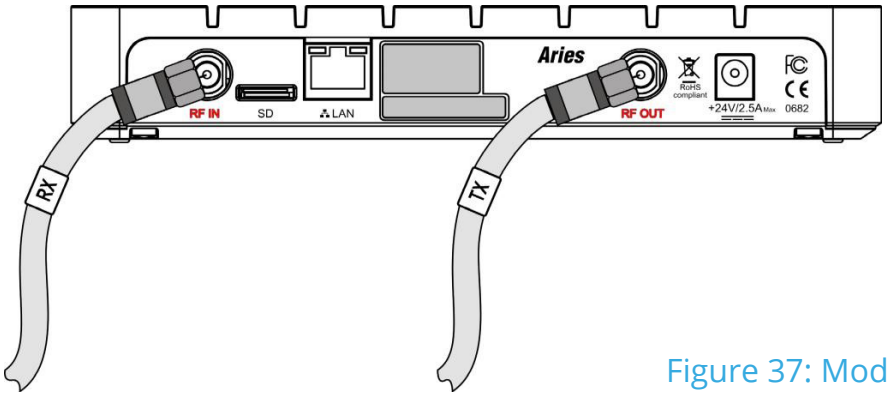

Figure 37: Modem RF Connections

2. Screw the male cable F-connector marked Tx on the RF OUT female connector on the modem.

Connecting the Modem to the Power Adapter

To power up the modem:

1. Connect the power adapter provided in the kit to the modem.

2. Connect the power adapter to a wall outlet. The Power LED goes On.

The modem performs a quick Power-On Self-Test (POST): the LEDs blink in a rapid succession.

On POST completion, the Power LED remains On, the rest of the LEDs remain Off.

Connecting the Modem to a PC

To connect the modem to a PC:

1. Connect one end of the LAN cable provided with the kit to the Ethernet port of the modem.

2. Connect the other end of the LAN cable to the Ethernet port of the PC.

> If the distance between the devices exceeds the length of the standard cable, you will need to obtain a longer cable.

3. Verify that the green LEDs of the LAN sockets of the modem and the PC are On.

Supported Operating Systems and Browsers

Supported operating systems and browsers:

All browsers and operating systems should work equally well but we recommend using Desktop PC/Laptop or MAC with an ethernet connection.

> We recommend keeping your operating system as up-to-date as possible. Not keeping your operating system up to date can result in issues, affecting the speed and efficiency of your computer as well its security settings.

Configuring the Computer

To configure the modem, you need to verify that your computer is configured properly:

1. DHCP settings must be enabled.
2. Proxy server must be disabled. See the next section for details.

Windows 10 - Enabling DHCP

To enable DHCP on the LAN adapter:

1.Click Start, Control panel.

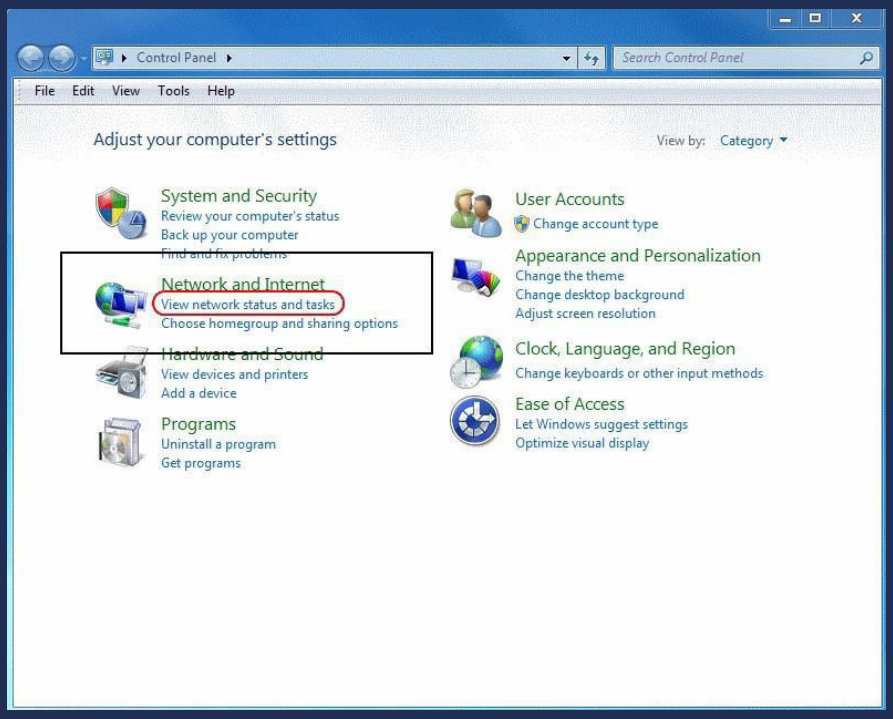

Figure 38: Win7 DHCP

2. In the **Network and Internet** section, click **Network and Sharing Center**

Network and Sharing Center page is displayed.

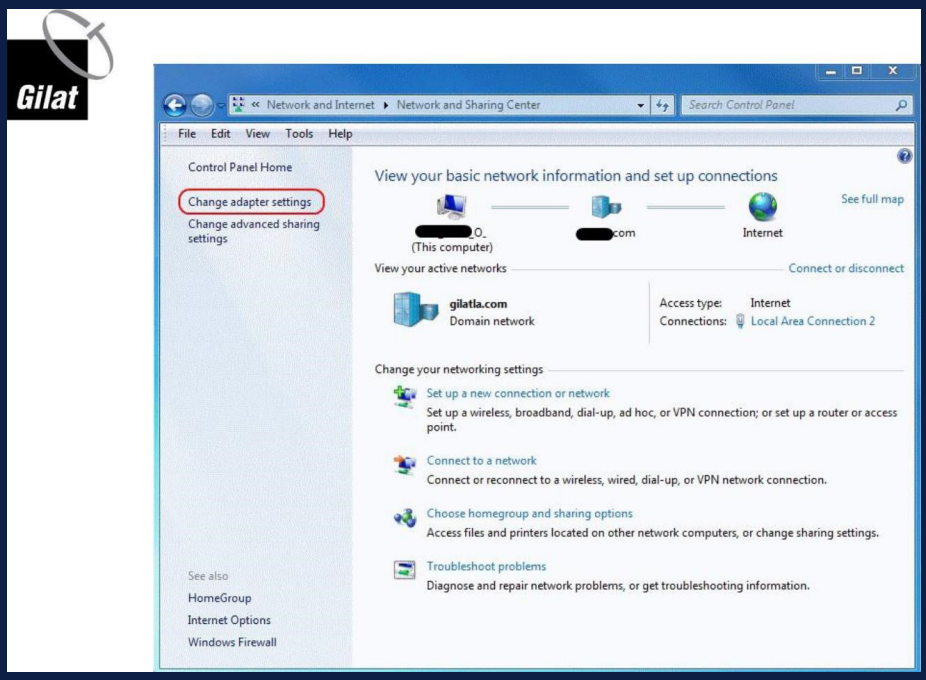

Figure 39: Win7 DHCP 1

3. In the left panel of the **Network and Sharing Center** page, click **Change adapter settings.** Available LAN adapters are displayed.

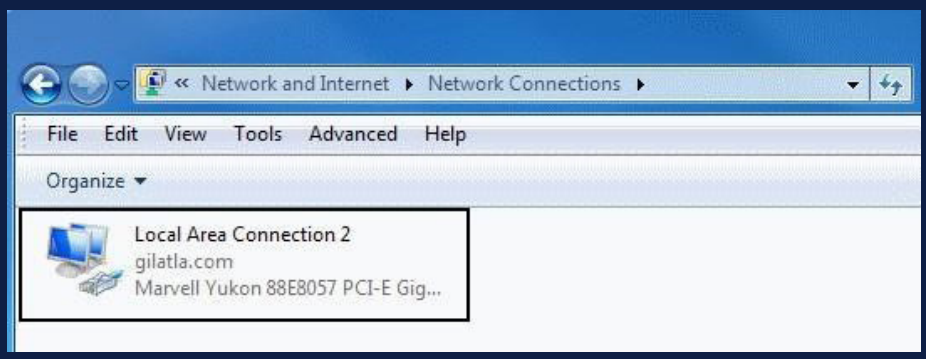

Figure 40: Win7 DHCP 2

4. Right-click the desired LAN adapter, and select **Properties**. LAN Adapter properties box is displayed.

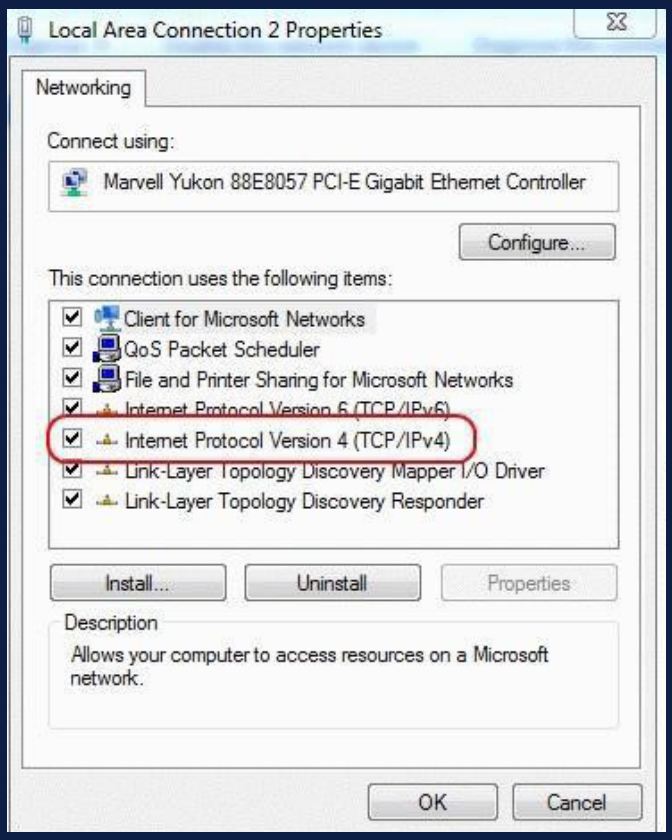

Figure 41: Win7 DHCP 3

5. Double-click **Internet Protocol Version 4 (TCP/IPv4)**. TCP/IPv4 box is displayed.

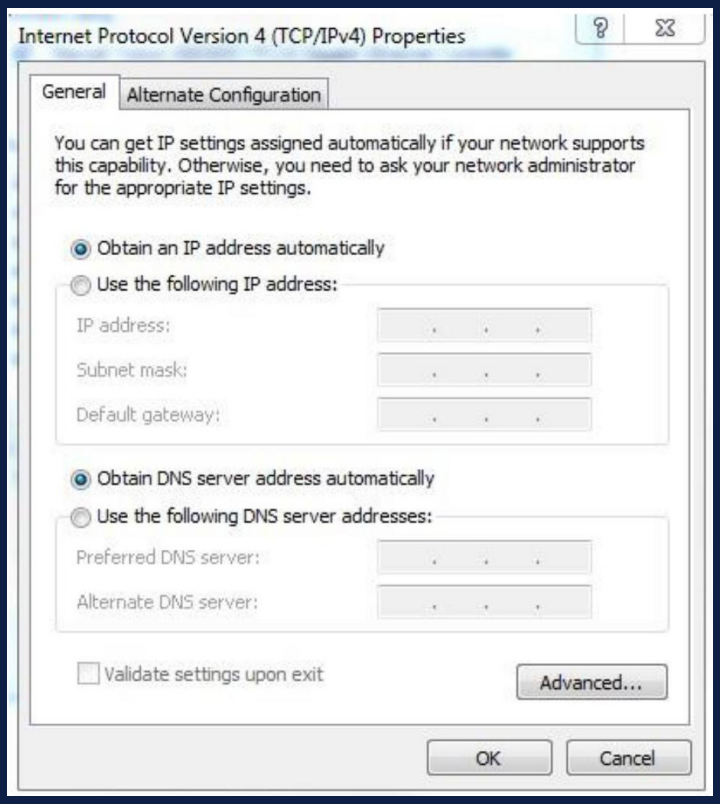

Figure 42: Win7 DHCP 4

6. Verify that **Obtain an IP address automatically** and **Obtain DNS server address automatically** are selected (if not, select), and click OK.

Disabling Proxy Server Connection

To disable a proxy server connection option:

1. In Internet Explorer, click **Tools - Internet Options** and select the **Connections** tab.

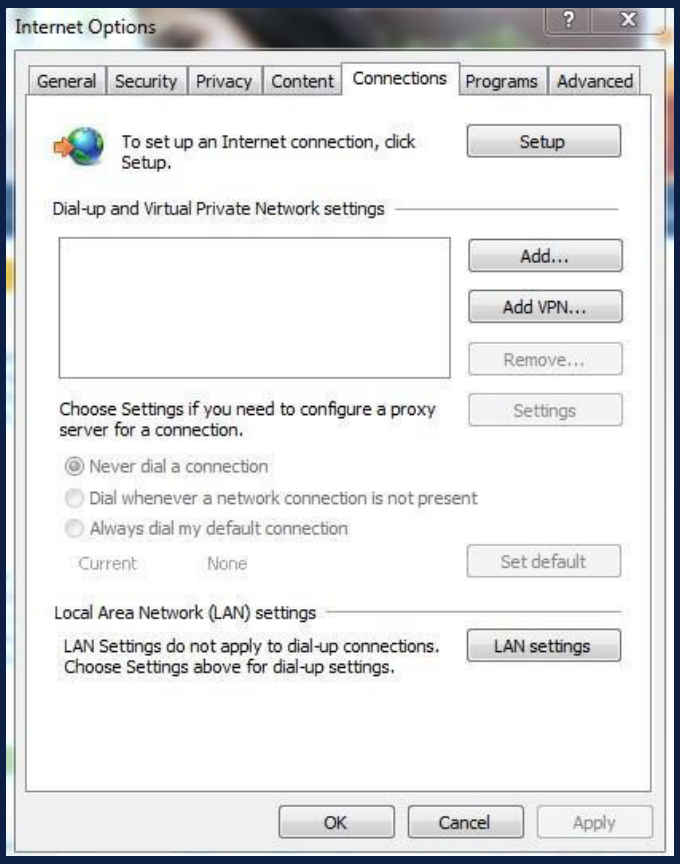

Figure 43: Disabling Proxy 1

2. Click **LAN settings** and verify that the **Use a proxy server for your LAN** checkbox is not selected.

Figure 44: Disabling Proxy 2

3. Click **OK** to save the configuration. The dialog box is no longer displayed.

4. In the Internet Options box, click **OK** to close the Internet Options dialog box.

Mac OS - Enabling DHCP

To enable DHCP on the LAN adapter:

1. From the **Apple** menu, select **System Preferences**.
2. Click the **Network** icon.
3. From the **Location** drop-down menu, select **Automatic**.
4. Select **Ethernet** (or the network adapter you wish to change the settings for).
5. Select **Using DHCP** from the **Configure IPv4** pull down menu
6. Click **Apply.**

Disabling Proxy Server Connection

To disable proxy server connection:

1. Launch Safari.
2. Click on the **Safari** menu.
3. Select **Preferences** from the drop-down menu.
4. Select the **Advanced** tab.
5. Click on the **Change Settings** button. The **Network** window is displayed.
6. Click on the Configure Proxies drop-down menu and select Manually.

6. Click on the **Configure Proxies** drop-down menu and select **Manually**.

7. Uncheck all proxy settings within the **Select a protocol to configure** menu.

8. Click **OK** to confirm.

9. Click **Apply**.

Entering Installation Parameters

> Do not start the installation until you verify that you have the Location Code and the RF Cluster Code (see the invoice). Without these parameters, you cannot successfully complete the modem configuration procedure.

To start the modem configuration:

1. On your PC, start your Internet browser to access the Installation Page.

> The Installation Page is stored on the modem itself - you do not need an Internet connection to access this page.

2. Type http://sky.manage in the address field, and press Enter. The start page is displayed.

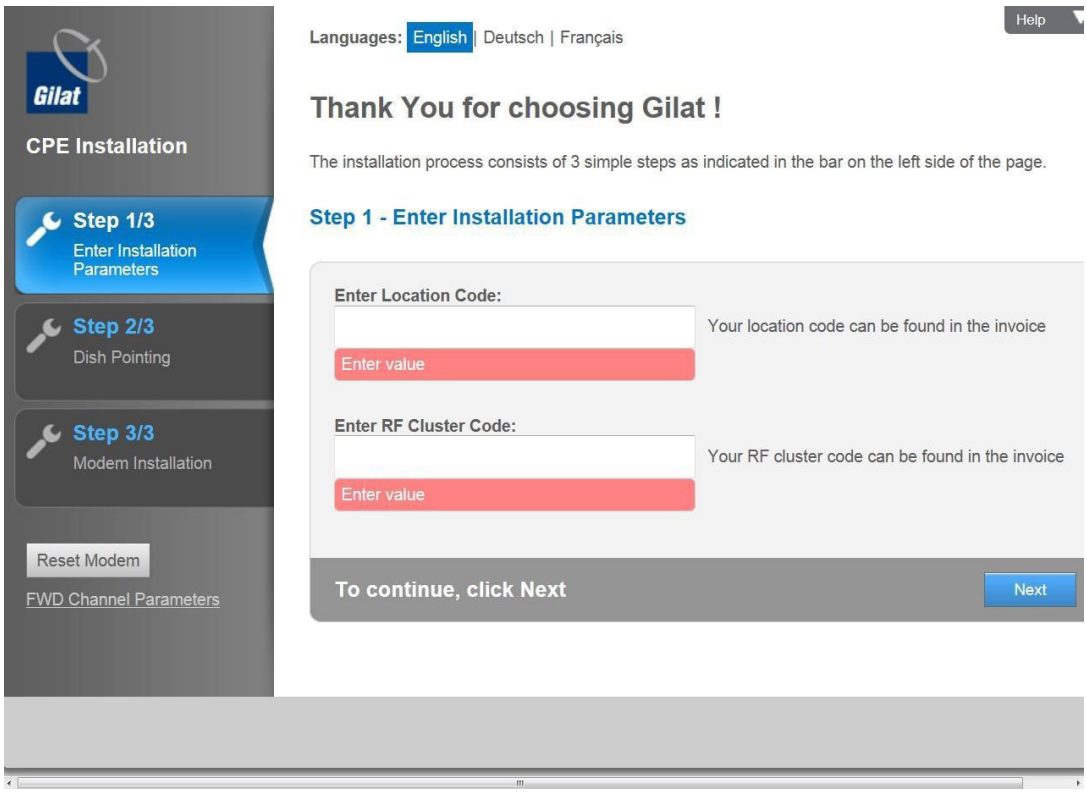

Figure 45: Modem Configuration Starting Page

3. Select the desired language.

> Language can be changed at any step.

4. Enter the location and the RF cluster codesand click **Next.**

The Dish Pointing page is displayed. Continue to the next section - Dish Pointing Preparation (on page 38).

All captures in this section were taken using Microsoft Internet Explorer. The screens viewed when using other web browsers may be slightly different in appearance.

All captures in this section were carried out on a modem running basic software. Once the modem connects to the system, it downloads additional code. The actual screens may be slightly different in appearance.

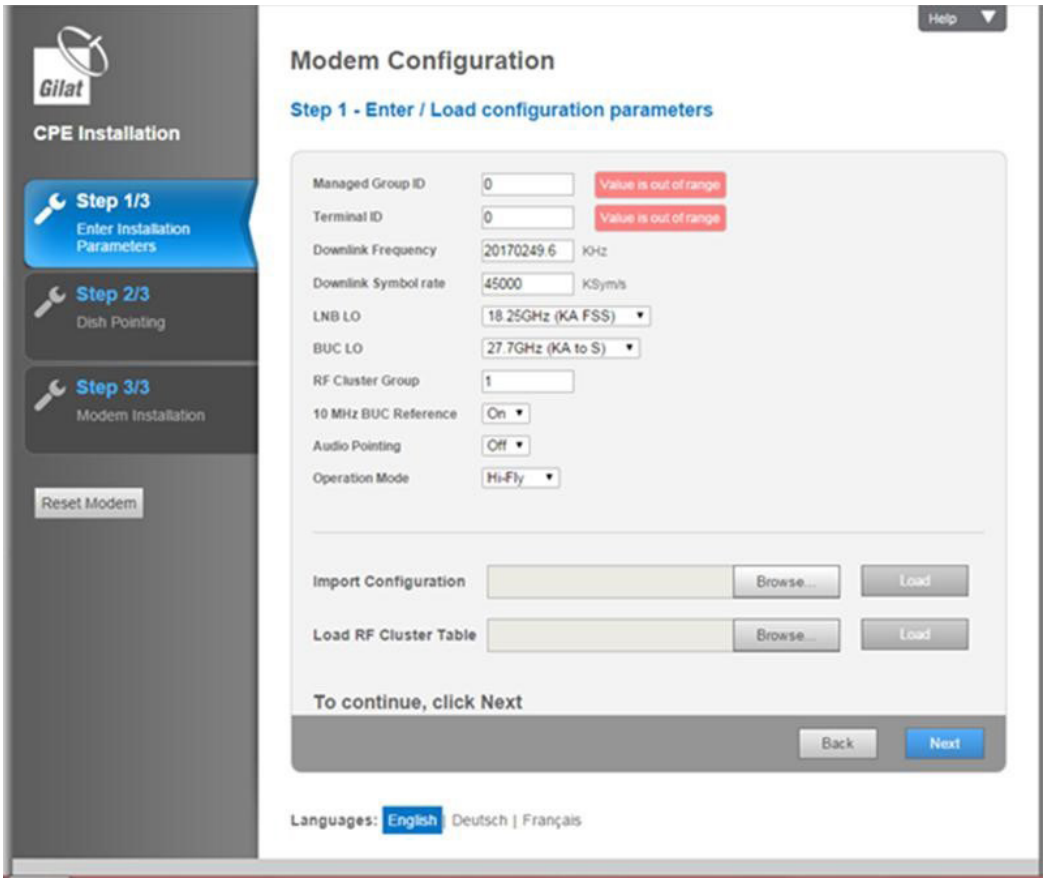

Loading Modem Configuration Settings

1. Click on the **import configuration** browse button and load the Configuration file from the E-Mail.

2. Enter the Managed Group ID and Terminal ID from the E-Mail, Click **Next**.

Dish Pointing Preparation

To prepare the modem for dish pointing:

1. In the Modem Configuration Starting Page screen, review the required steps.

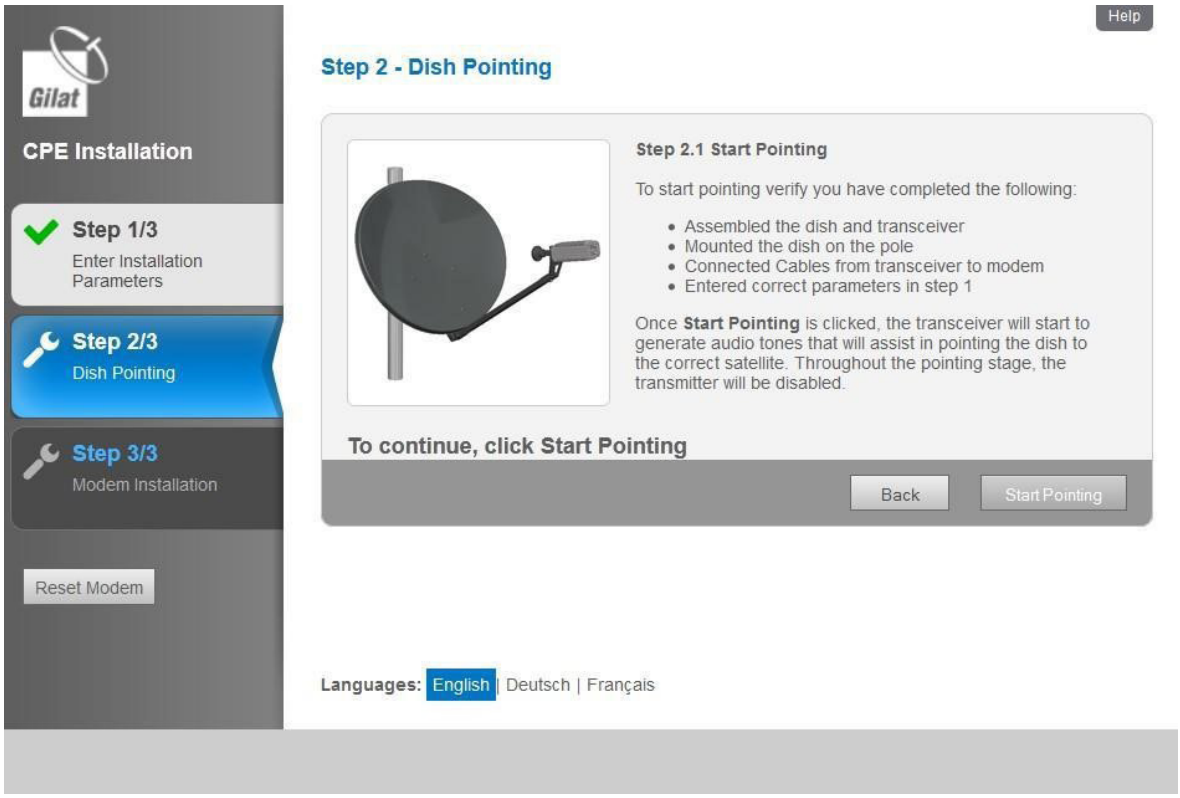

Figure 46: Dish Pointing Preparation Page 1

2. Click **Start Pointing**. The Dish Pointing Preparation Page 2 is displayed. (Or click **Back** to make changes in the installation parameters.)

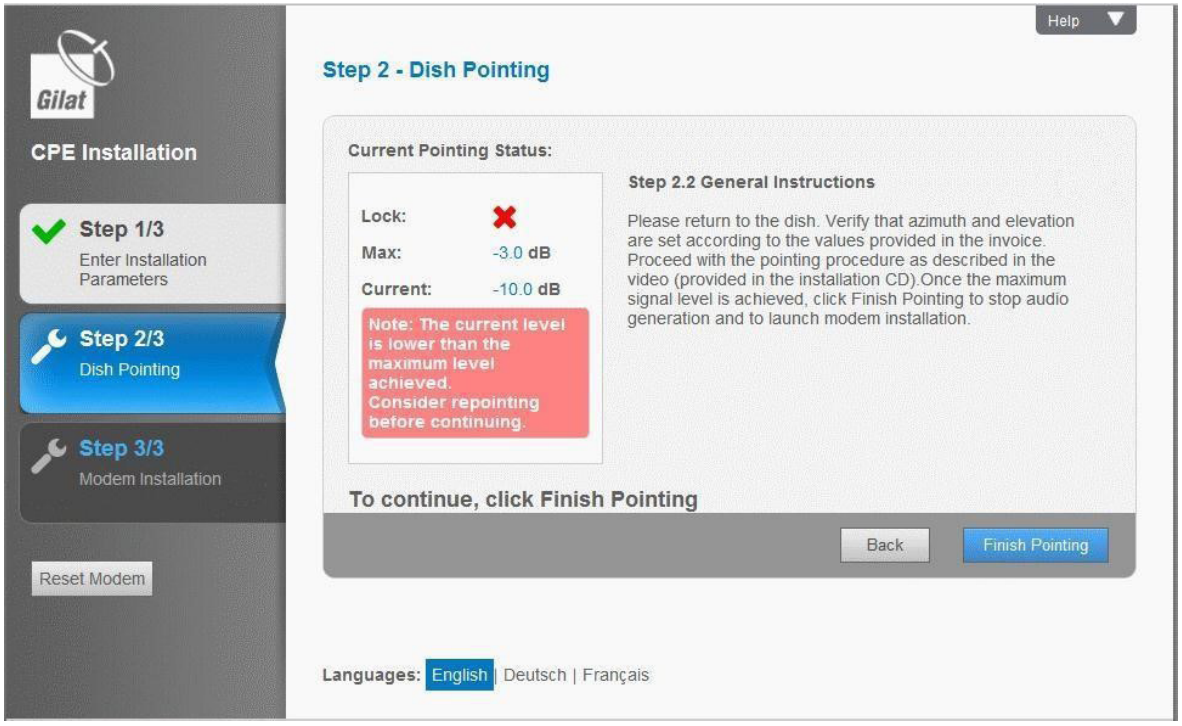

Figure 47: Dish Pointing Preparation Page 2

3. The modem is ready to respond to the signal power fluctuations that will occur while you are pointing the dish.

> If nominal azimuth happens to be set accurately, the above screen may look slightly differently - showing that the signal is locked.

At this point, the transceiver starts emitting the Searching tone indicating that it is seeking the carrier.

> Regarding the beeping tones: view the accompanying video to get a good idea of the different tones.

4. You can now leave the PC, move to the place where the dish is located, and start pointing it. Continue to the Dish Pointing section (below).

Dish Pointing

Audio Indication

The transceiver has a built-in speaker that allows the system to indicate the state and power of the signal.

The sounds emitted by the transceiver can be divided into the following types:

Searching – indicates that the CPE is in installation stage but the modem is not locked yet.

Transition2Lock – a short two-second transitional tone indicating that the modem is locked. Following this tone, the transceiver will immediately start to emit one of the locked tones, according to the reception level.

Locked – a range of beeps indicating that the modem is locked on the satellite. Pitch and stagger rate are proportionate to the level of reception: the better the reception the higher the pitch and the faster the stagger rate.

LockLowSNR

LockMedSNR

LockMaxSNR

Peak – At any given time during the pointing there is a maximum reception level registered. This level will gradually increase as the pointing progresses. The peak continuous tone is coupled to the maximum reception level.

Transition2Searching - If the Locked state is lost during the pointing, there will be a 2-second transitional tone ("police car siren") which will be followed be the Searching tone.

Abort – A mismatch between the parameters entered and the kit installed.

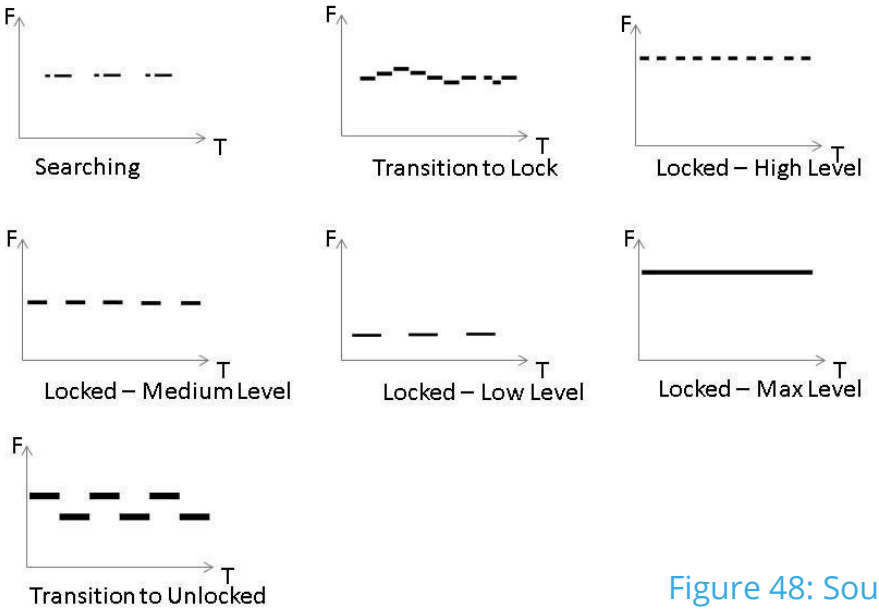

Figure 48: Sound Visualization

Coarse Pointing

To perform the coarse pointing:

1. Verify that the nominal elevation, azimuth and skew values are set correctly.

> Before you proceed to the next step:
>
> Do not apply force to the reflector. Excessive pressure on the reflector can cause reflector deformation.
>
> Hold the dish assembly at the back structure and Az/El while rotating it.

2. Rotate the dish as slowly as possible (approximately 1 degree per second) around the pole in one direction until the beeping tone changes, indicating that the modem is locked on the satellite. The Locked state is indicated by a 2-second transitional tone (Transition2Lock).

> The Abort tone will be heard if the kit installed is not compatible with the RF cluster code entered. Stop the installation and contact the Help Desk.
>
> Typically the initial nominal elevation setting should be sufficient for locking - but not the azimuth setting. In the unlikely event that initial azimuth setting was accurate, one of the Locked tones (LockLowSNR, LockMedSNR, LockMaxSNR) will be heard from the very start, instead of the Searching tone. Proceed to Step 4 below.
>
> If the Locked tone is not obtained after rotating the dish 30 degrees from the nominal azimuth value, rotate it in the opposite direction, passing the nominal azimuth value by no more than 30 degrees in the opposite direction.
>
> If the Locked tone is still not obtained, repeat the rotation three more times, each time at a slower pace than the previous one.
>
> If the Locked tone is not obtained after that, double-check all settings and verify that there is a clear line of sight to the satellite.

3. Once the transceiver emits the Locked tone, stop rotating the dish at once.

After the Transition2Lock tone is heard, there will be a beeping tone indicating that the carrier is locked. The pitch and stagger rate of this tone are proportionate to the level of reception:

At low reception levels, there will be a low pitch and low stagger rate tone (LockLowSNR).

At medium reception levels, there will be a medium pitch and medium stagger rate (LockMedSNR).

At maximum reception levels, there will be a Max pitch and Max stagger rate tone (LockMaxSNR).

Throughout the entire procedure, the tones will change accordingly.

4. Record the position of the elevation offset arrow.

5. Firmly tighten the clamp nuts that hold the dish assembly on the pole, to prevent further change of its position relative to the satellite. Tightening should be done half a turn at a time.

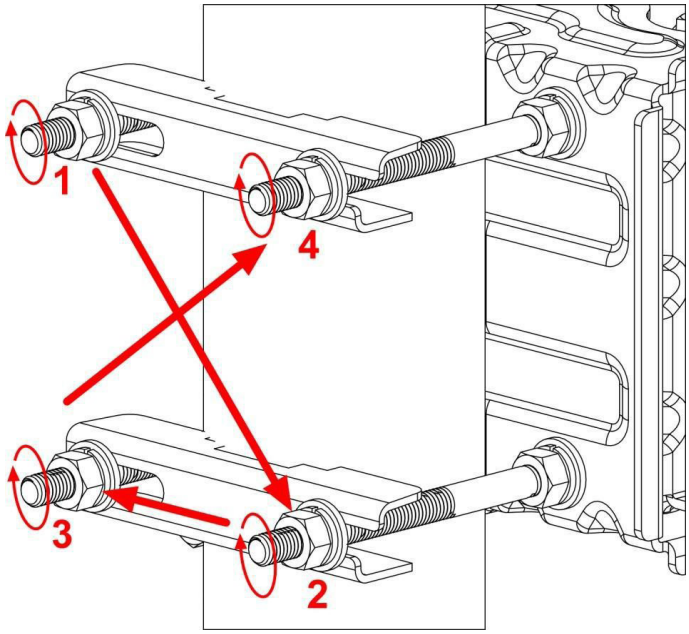

Figure 49: Nut Tightening

Tightening the nuts, the way it is described above is not mandatory, but it is recommended. Tightening the nuts in a different way may cause a change in the assembly position to the extent that the actual elevation and azimuth values will considerably differ from the nominal values.

Excessive tightening will damage the bolts, nuts, or clamps. Take care not to warp the clamps.

6. If the elevation offset arrow position changes after tightening the bolts, adjust the elevation accordingly.

Once you tighten the nuts, the settings may change; consequently, the audio tones might change. This is the expected normal mode of operation.

Fine Pointing

The process is completed by fine-tuning the dish position using the built-in tuning tool until the strongest signal is obtained.

Fine pointing of the dish can be started once a Locked tone (LockLowSNR, LockMedSNR, LockMaxSNR) is being constantly emitted by the transceiver.

If the Locked tone is lost during the clamp tightening, you need to reacquire the signal by modifying the elevation setting by +/- 2 degrees around the nominal value.

Fine pointing of the dish can be started once a Locked tone (LockLowSNR, LockMedSNR, LockMaxSNR) is being constantly emitted by the transceiver.

If the Locked tone is lost during the clamp tightening, you need to reacquire the signal by modifying the elevation setting by +/- 2 degrees around the nominal value.

To complete the dish pointing:

1. Using a spanner/ratchet, rotate the azimuth screw to change the azimuth settings on the dish in any direction.

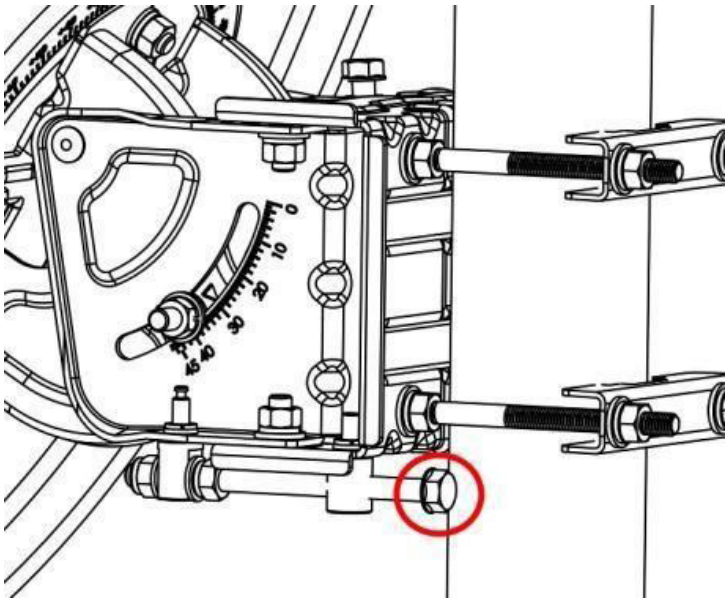

Figure 50: Az/El Azimuth Screw

2. Once you can hear the audio signals reduce tone and staggering rate, reverse the direction at once.

If, instead of stopping and reversing the direction, you continue too far, you may lose the Locked state. In this case, you will hear a transition tone (Transition2Searching).

3. At some point, you will hear the pitch increase, and the tone will change from staggering to continuous (Peak). Continue in the same direction until staggering tone starts again. Reverse the direction once again and stop as soon as you hear a continuous tone.

> If the continuous tone position is not achieved, stop at the highest-pitch staggering tone (which indicates the strongest signal available)

4. Using a spanner/ratchet, rotate the elevation screw to change the elevation settings in either direction until the audio tone drops in pitch and stagger rate. Reverse the direction until a continuous tone position is achieved. Continue in the same direction until staggering tone starts again. Reverse the direction again and stop as soon as a continuous tone is achieved.

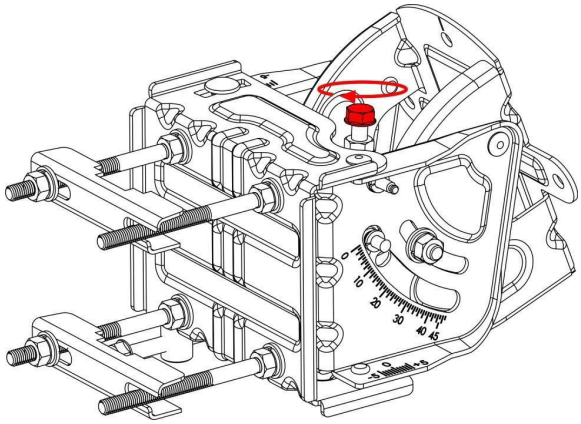

Figure 51: Elevation Fine-Tuning

5. At this point, it is necessary to optimize the azimuth setting for the second time. Using a spanner/ratchet, rotate the azimuth screw to change the azimuth settings in either direction until the audio tone indication drops in tone and stagger rate. Reverse the direction until a continuous tone position is achieved. Continue in the same direction until staggering tone starts again. Reverse the direction again and stop as soon as a continuous tone is achieved.

6. Tighten the nuts:

two nuts retaining the Az/El vertically movable part (one at each side - right and left)

two nuts retaining the Az/El horizontally movable part

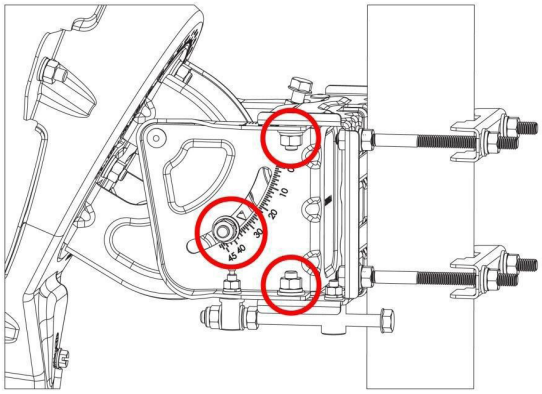

Figure 52: Nuts to Be Tightened

7. Apply light pressure on the side and top of the assembly until the tone changes to a staggering tone. Verify that once you let go, the tone returns to peak tone.

8. Once you have completed fine pointing the dish, return to your PC. Continue to Modem Installation (on page 44).

Modem Installation

To complete the modem installation:

1. In the Dish Pointing Preparation Page 2 screen, click **Finish Pointing.**

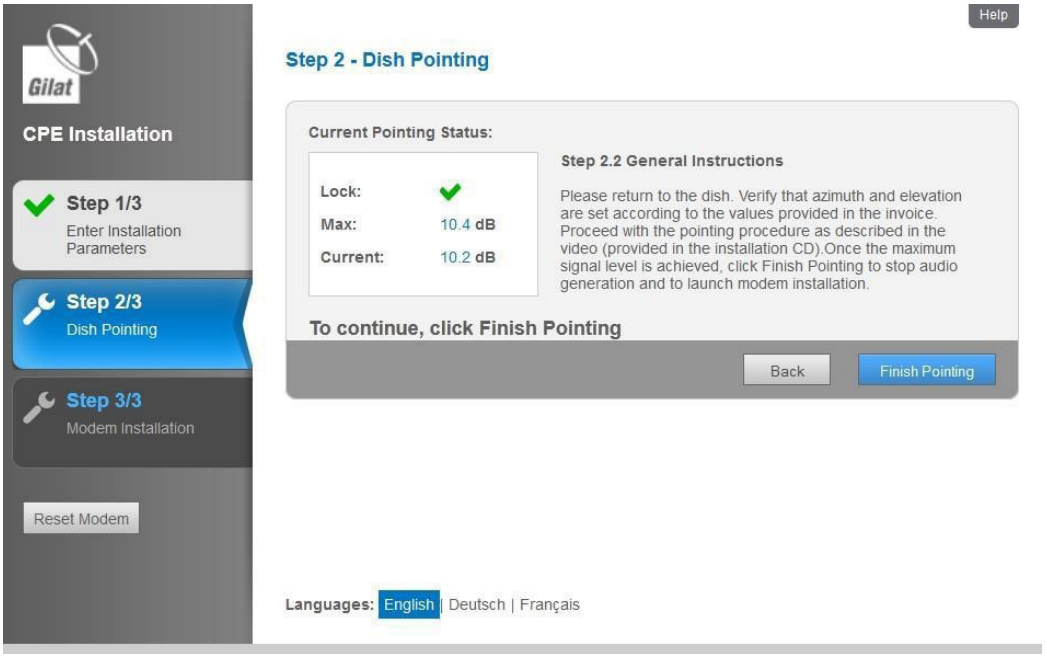

Figure 53: Locked on Satellite

2. A reminder is displayed.

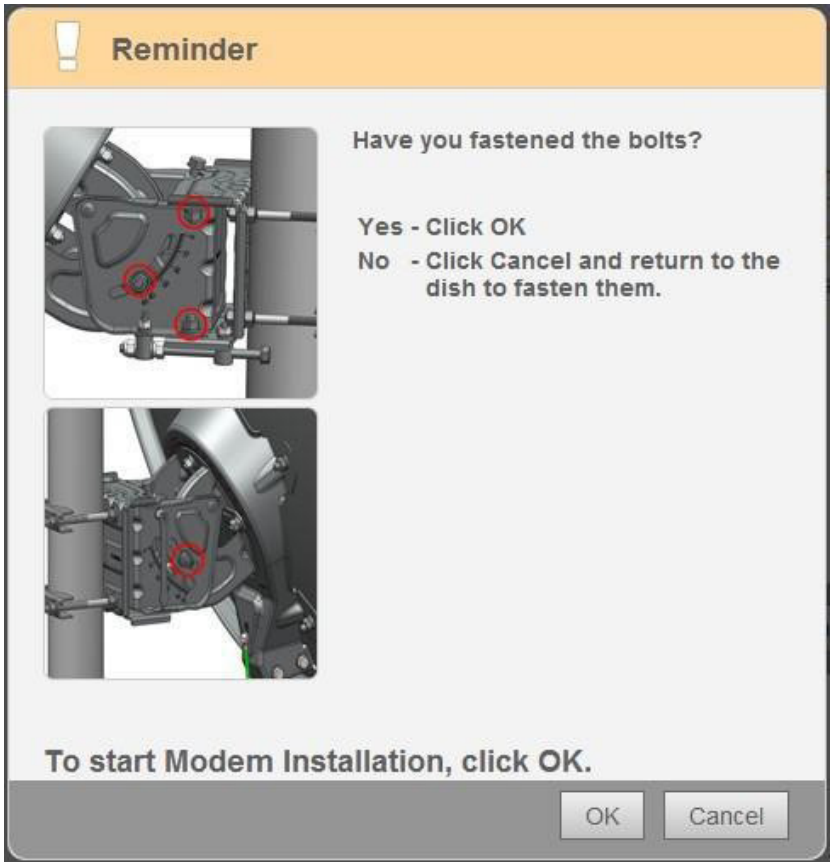

Figure 54: Reminder

3. Click **OK** to start modem installation if you have tightened the bolts.

4. A 5-step modem installation process starts. You do not need to do anything: just follow the steps to verify that each one of them is completed successfully:

a. Step 1/5 - Software Download – The modem is downloading the latest software version.

b. Step 2/5 - Forward Channel Acquisition – Modem locks onto the correct carrier for network admission.

c. Step 3/5 - Return Channel Acquisition – Modem establishes a return link with the central station.

d. Step 4/5 - Network Admission.

e. Step 5/5 - Installation Quality Verification – The modem establishes a session with a control device in the central station to verify that the signal quality of the forward channel and return channel is sufficient.

At the end of the process, the Installation completed successfully dialog box is displayed:

Figure 55: Installation Complete Box

5. Click Finish to complete the installation. The Home Page containing the system general information is displayed.

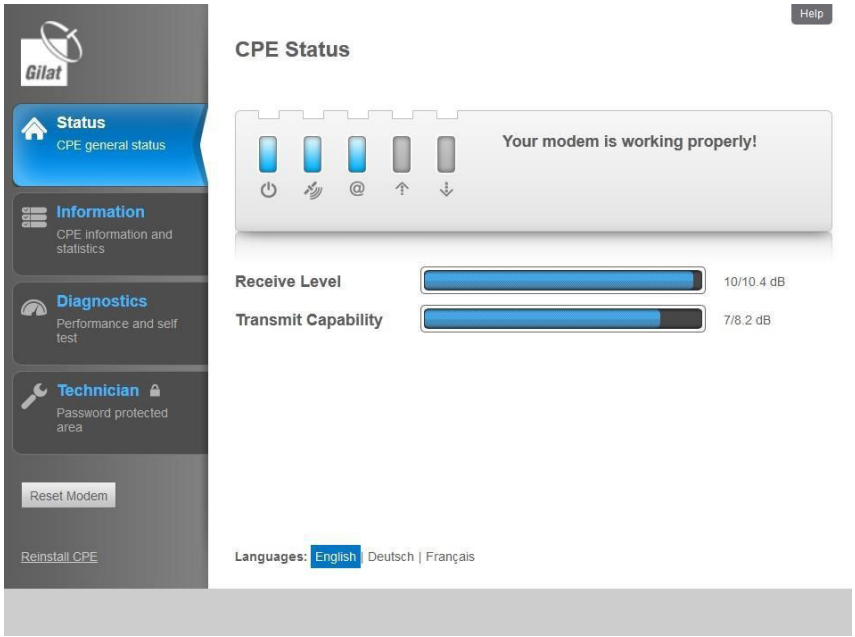

Figure 56: Modem Installation - Final Screen

The current value is often lower than the maximum achieved value. This is the expected behavior as the value constantly fluctuates. There is no need to return to the dish to improve the pointing unless there is an explicit warning (in case the difference between the current value and the maximum achieved value is larger than expected)

6. You have completed the Gilat CPE installation and can start browsing the Internet.

Dish Repointing

If you ever need to repoint the dish, remember to loosen the azimuth and elevation fastening bolts. Trying to rotate the azimuth and elevation screws without first releasing their fastening bolts will damage the Az/El!

Appendix A: Dish Pointing Smartphone Applications

Satellite finder/dish pointing applications that run on a smartphone allow interposition of the projection of satellite positions on the sky on the actual view via the viewfinder of the built-in camera, based on Augmented Reality.

To determine a suitable location using a smartphone:

1. Download a satellite pointer application of your choice.

> We recommend the Dish Align app (for Android and iOS) by BejBej Apps - you can download it from https://www.bejbej.ca/app/dishalign

2. Install the application.

3. Run the application.

4. Visit the desired location where you would like to install the satellite dish.

5. Point the smartphone in the desired direction.

6. Locate the satellite listed in the invoice.

7. Determine whether the location you have selected provides a clear line of sight from the satellite dish to this satellite. If you see any tall objects (trees, buildings etc.) overlapping the satellite projection, the location is not suitable.

Appendix B: System Monitoring

Status

This page allows you to check the general status of your CPE.

The message you expect to be displayed is Your modem is working properly!

In case of malfunction, you may encounter other messages displayed. Refer to the Error Messages section (see page 48) for solution.

Information

If you encounter a non-optimal service condition that requires a call to our Technical Support teamr, our technicians will ask you to read out what this page says in the following sections:

CPE Status

CPE Identification

Statistics

Diagnostics

The CPE Diagnostics page provides access to the installation log. If your installation process does not result in a “Your modem is working properly!” message in the CPE Status page, and you call our Technical Support team, the technician ask you to read out what this log says.

Technician

This page is password-protected, and you will not be able to access it. It is used by our Technical Support team.

Appendix C: List of Acronyms

POST Power-On Self-Test

CPE Customer Peripheral Equipment

DHCP Dynamic Host Configuration Protocol

DNS Domain Name Server

ISP Internet Service Provider

LAN Local Access Network

LED Light-Emitting Diode

OS Operating System

RF Radio Frequency

Appendix D: Error Messages

The following error messages can be displayed during modem installation.

The table below offers possible causes and resolution methods.

#	Error Message / Description	Error Cause	Resolution
1	RF Cluster code value is out of range	Invalid RF Cluster code entered	Enter correct RF Cluster code
2	Location code value is out of range	Invalid Location code entered	Enter correct Location code
3	On clicking Next in the first page of Install: Rx cable is not connected properly. In Step 2 of installation, the following error dialog is shown: Configuration mismatch detected!	CPE has detected the Rx cable disconnect	Verify: Rx cable connected to RF In port on modem. Rx cable indoor end assembled correctly to connector. Rx cable connected to Rx port on Transceiver. If the problem persists contact operator

#	Error Message / Description	Error Cause	Resolution
4	In Step 2 of installation, the following error dialog is shown: Configuration mismatch detected!	CPE has detected that the RF cluster code does not match the kit provided.	Verify the installation parameters. If the parameters are correct, contact Help Desk.
5	When Finish Pointing button is clicked in Step 2 of installation and dish status is Not Locked: Modem must be locked before ending pointing.	Modem is not locked	Achieve modem locking
6	Step 3, substep 1/5: software download timeout	Modem cannot complete software download	Check the Rx/Tx cable connection Restart activation
7	Step 3, substep 3/5: Return Channel, Acquisition timeout	Modem cannot complete Return Channel Acquisition	Restart activation; if the problem persists, contact Help Desk
8	Step 3, substep 4/5: Network Admission timeout	Modem cannot complete Network Admission	Restart activation; if the problem persists, contact Help Desk
9	In Step 3 of installation, the following error dialog is shown: Note: [step name] is taking longer than expected.	Timeout	Contact the Help Desk (see contact info in the manual provided with the kit). Once the problem is resolved, click Restart Activation.
10	In Step 3 of installation, the following error dialog is shown: CPE Installation Failure Pointing may be inaccurate, thus service is prohibited.	RF Audit has failed	Pointing may be inaccurate, thus service is prohibited. Verify that the weather is clear and that there are no obstructions in the line of sight from the dish to the satellite. Click Repoint Dish to improve pointing accuracy. If the problem persists, contact the Help Desk.
11	In the CPE Status, a message is displayed: No Sync Synchronization problem.	Modem cannot synchronize with the hub. This could be related to a technical problem at the satellite service provider's site.	Wait for a few minutes and restart the modem. If the problem persists, contact the Help Desk.
12	In the CPE Status, a message is displayed: No Satellite Link, Link establishment problem, or No Lock	Modem cannot establish link to the hub. This could be related to extreme weather conditions either at the user's site or at the satellite service provider's site.	If the weather is bad, wait a few minutes. If the weather is good, restart the modem. If the problem persists, contact the Help Desk.

Appendix E: Troubleshooting

In This Section

The Elevation/Azimuth Screw is not Moving

Check the fastening nuts to make sure they are loose.

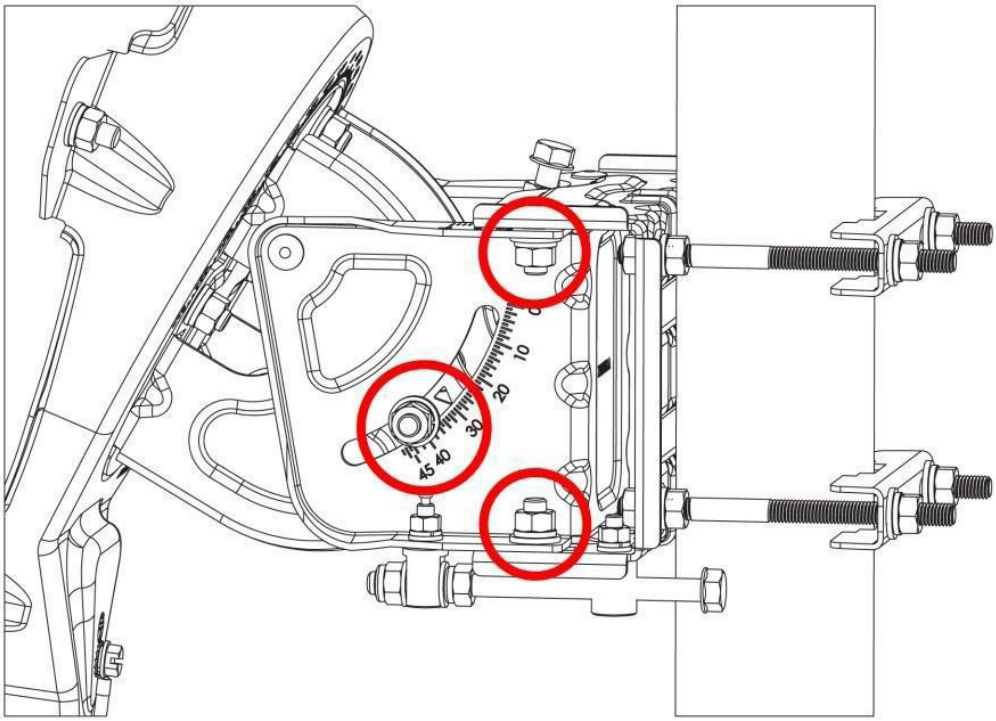

Figure 57: Loosening the Screws

If the fastening nuts had been tightened, they will prevent the elevation/azimuth screw from further movement.

The Modem LEDs are not On

This indicates a power supply problem.

Check that the electric socket is powered.

Check that the electric plug of the power adapter is tightly connected.

Check that the power adapter is powered.

Check that the modem is connected to the power adapter.

If the above measures do not resolve the problem, contact Help Desk.

I Cannot Connect to the Modem

1. Check the power.
2. Check the LAN configuration on your PC.
3. Check the LAN LEDs of the PC and the modem.
4. Replace the LAN cable.

If the above measures do not resolve the problem, contact Help Desk.

The Transceiver Emits No Sounds

1. Check the Tx cable connection.
2. Verify you have reached the dish pointing step 2.2

If the above measures do not resolve the problem, contact Help Desk.

I Cannot Lock Onto the Satellite

1. Check the parameter setting.
2. Make sure that the line of sight is unobstructed.
3. Check the weather: you could have started pointing during clear-sky conditions - but it can be cloudy or rainy now.
4. Check the elevation and azimuth settings.
5. Check elevation compensation.
6. Make sure that the cable connectors are correctly assembled and tightly fastened to the modem and the transceiver.
7. Try scanning (rotating the dish) at a slower pace.

If the above measures do not resolve the problem, contact Help Desk.

I Am Experiencing a Deterioration of Service

You can experience a deterioration of service due to several reasons (or any combination thereof):

1. There can be congestion in the entire network due to high bandwidth consumption by all users.

2. You may have exceeded your allocation. Check your current quota status on your ISP's site.

3. In the modem web page, click Diagnostics and see the installation log. If the current signal level is lower than that obtained during installation, this can happen due to rough weather in your location or in the location of the central transmitter/receiver (hub).

4. Verify that all the nuts had been tightened properly. If the dish has moved (for whatever reason), repoint it.

5. Check whether there are new obstructions in the line of sight (a tree that has grown, a new building, etc.). If not, try reinstalling the modem to achieve higher level.

If the above measures do not resolve the problem, contact Help Desk.

I Cannot Obtain the Peak Tone

1. If the weather has changed since you started the pointing, this could affect the link quality.

2. Try finding the highest pitch and staggering rate by changing the azimuth. Once found, try once again to achieve the peak tone by changing the elevation.

3. If the above measures have not resolved the problem, return to the PC and check the web.

If there are no error messages, you can proceed with installation.

If there is an error message, it indicates that a better location was identified during the installation. Return to the dish and try repointing it at a slower pace.

If the above measures do not resolve the problem, contact Help Desk.

Appendix F: FAQs

In This Section

What download/upload speeds can I achieve?

It depends upon your plan. For more information, contact our Technical Support team on +44 (0) 1869 222 900 (select option 2).

Is there dangerous radiation?

No. The power of the amplifier used is limited to several watts (typically 2.5W) transmitted with a directional dish, with a very low out-of-beam emission. The only location where the level of radiation can be dangerous is between the transceiver and the dish (see Safety Warnings (on page 7)).

However, during installation, while the transceiver is emitting the beeping tones, the power amplifier is disabled - hence no radiation is emitted.

Can I buy another modem and put splitters on the cables?

Unfortunately, you cannot. Only one modem can be connected to one transceiver.

Can I add a wireless router or an Ethernet switch behind the modem?

Yes, you can. In this case, you need to connect the router to the modem; then connect your PC to the router and configure it according to the user's manual that comes with the router.

Can weather conditions affect modem reception?

Yes. However, unlike broadcast channels, in which the picture is maintained and deterioration is noticed only under severe conditions, the CPE can track the signal even during a heavy rain at the expense of available bit-rate reduction.

Are any Internet ports/addresses blocked?

No, no ports/addresses are blocked by default.

Can I watch movies online?

Technically - yes. However, you must be aware that streaming video will consume a large portion of the monthly quota.

Do I need authorization to install satellite dish?

This has been handled by the operator who received appropriate permissions from the authorities.

In case of aesthetics-related problems with local authorities, this is the user's responsibility.

What do I do if some of the equipment is damaged?

Contact our Technical Support team on +44 (0) 1869 222 900 (select option 2).

What are the best conditions for dish installation?

Clear sky

No wind beyond a light breeze

Good lighting (daytime hours)

Index

CPE Installation and Pointing

Congratulations on completing the self-installation of your bigblu-provided Gilat SkyEdge II satellite dish. We trust that the instructions proved clear and that you are now successfully connected to a beam that has travelled 22,000 miles to be with you.

If you do experience any connection problems or you have experienced any problems during installation, please do feel free to give our Technical Support team a call on +44 (0) 1869 222 900 (selecting option 2).

Sales +44 (0) 1869 222 900
Support +44 (0) 1869 222 900
Accounts +44 (0) 1869 222 900

bigblu broadband Plc
108 Churchill Road
Bicester, Oxfordshire
OX26 4XD

9:00-17:00 Monday to Friday
10:00-15:00 Saturday to Sunday
ALL TIMES ARE GMT